TOWN OF BROWNSBURG, INDIANA

CONSTRUCTION STANDARDS

SPECIFICATIONS AND DETAILS

MAY 2013

TOWN OF BROWNSBURG, INDIANA
CONSTRUCTION STANDARDS

SPECIFICATIONS AND DETAILS

General, Erosion and Sediment Control, Earthwork, Open Trench Installations, Trenchless Installations, Drinking Water Systems, Stormwater and Drainage Systems, Sanitary Sewer Systems, and *Wastewater Force Main and Lift Station Systems* Technical Specifications and Details Certified By:

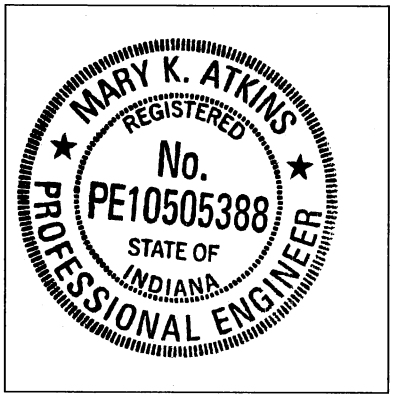

Wessler Engineering, Inc.
Mary K. Atkins, P.E.
State of Indiana, No. 10505388

Transportation and *Roadway Sections* Technical Specifications and Details Certified By:

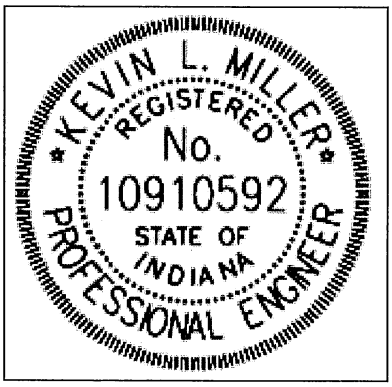

VS Engineering, Inc.
Kevin L. Miller, P.E.
State of Indiana, No. 10910592

MAY 2013

TABLE OF CONTENTS

TECHNICAL SPECIFICATIONS

Division 1 - General Requirements

Section 01010 – Summary Items ..... 6 Pages

Division 2 - Technical Requirements

Section 02100 – Subgrade Treatment ..... 3 Pages
Section 02101 – Erosion and Sediment Control and Stormwater Pollution Prevention ..... 7 Pages
Section 02130 – Flowable Backfill ..... 3 Pages
Section 02200 – Earthwork ..... 6 Pages
Section 02220 – Trenching, Backfilling and Compaction for Utilities ..... 8 Pages
Section 02224 – Trenchless Excavation – Horizontal Borings ..... 5 Pages
Section 02226 – Trenchless Excavation – Directional Drilling ..... 6 Pages
Section 02500 – Paving and Surfacing ..... 17 Pages
Section 02501 – Standards of Roadway Geometric Design ..... 7 Pages
Section 02502 – Standards of Roadway Construction ..... 5 Pages
Section 02504 – Adjacent Roadway Improvements ..... 2 Pages
Section 02505 – End of Roadway ..... 1 Page
Section 02506 – Signage ..... 2 Pages
Section 02660 – Water Mains ..... 14 Pages
Section 02661 – Water Services ..... 7 Pages
Section 02675 – Disinfection ..... 5 Pages
Section 02710 – Underdrain Systems ..... 5 Pages
Section 02715 – Hybrid Ditch Systems ..... 8 Pages
Section 02720 – Storm Sewer Systems ..... 15 Pages
Section 02730 – Gravity Sanitary Sewer Systems ..... 12 Pages
Section 02732 – Testing Sanitary Sewers and Force Mains ..... 8 Pages
Section 02737 – Force Main Sewer Systems ..... 10 Pages
Section 02738 – Composite Lining System ..... 9 Pages
Section 02739 – Submersible Lift Station ..... 22 Pages
Section 02960 – Bioretention ..... 8 Pages
Section 03500 – Roller Compacted Concrete Pavements (RCC) ..... 11 Pages
Section 03501 – Full Depth Recycling (FDR) ..... 4 Pages
Section 03502 – Pervious Concrete ..... 4 Pages
Section 04950 – Preservative Seal ..... 6 Pages
Section 13550 – Emergency Preemption (GPS) ..... 12 Pages
Section 13560 – Ornamental Lighting ..... 1 Page
Section 13575 – Pedestrian Push Button System ..... 1 Page

TABLE OF CONTENTS

CONSTRUCTION DETAILS

GE - General

General Utility Location Plan & Section GE-01
Minimum Crossover and Separation Requirements for Sewer & Water Mains GE-02
Gravity Sewer Repair GE-03

EC - Erosion and Sediment Control

Individual Building Lot EC-01
Silt Fence EC-02

EW - Earthwork

Side Yard Swale EW-01
Turf Armored Ditch EW-02
Hard Armored Ditch EW-03
Detention/Retention Ponds EW-04

OT - Open Trench Installations

Rigid Pressure Pipe Trench OT-01
Rigid Gravity Pipe Trench OT-02
Flexible Pressure Pipe Trench OT-03
Flexible Gravity Pipe Trench OT-04

TL - Trenchless Installations

Casing Pipe TL-01
Casing Spacer Detail TL-02
Pressure Pipe Crossing Waterway TL-03
Pressure Pipe Crossing Roadway/Railroad TL-04
Gravity Pipe Crossing Waterway TL-05
Gravity Pipe Crossing Roadway/Railroad TL-06

TR - Transportation

Concrete Chair Back Curb & Gutter TR-01
Concrete Roll Curb & Gutter TR-02
Driveway Curb Cut TR-03
Curb Inlet Detail TR-04
Concrete Center Curb TR-05
Concrete Sidewalk Detail TR-06
Sidewalk ADA Ramp Detail TR-07
Truncated Dome Detail TR-08
Commercial & Industrial Street Pavement & Underdrain Pipe Detail TR-09
Residential Street Pavement & Underdrain Pipe Detail TR-10

Storm Sewer Lateral Connection at Road Underdrain TR-11
Connection to Existing Streets TR-12
Widening Detail TR-13
HMA Pavement Trench Repair Detail TR-14
Minimum Entrance Requirements TR-15
Roadway Improvements at New Development Entrances TR-16
Commercial & Industrial Cul-de-Sac Turnarounds TR-17
Residential Cul-de-Sac Turnarounds Street Class 1 ..... TR-18
Temporary Cul-de-Sac Street Class 1 ..... TR-19
End of Roadway Detail TR-20
Standard Barricade TR-21
Standard Single Lane Roundabout Signage Detail TR-22
Ornamental Lighting Detail TR-23
Curb Painting Requirements TR-24

RS - Roadway Sections

Typical Cross Sections – Primary Arterials A1 and A2 ..... RS-01
Typical Cross Sections – Primary Arterials B1 and B2 ..... RS-02
Typical Cross Sections – Primary Arterials C1 and C2 ..... RS-03
Typical Cross Sections – Secondary Arterials 1 and 2 ..... RS-04
Typical Cross Sections – Collectors 1 and 2 ..... RS-05
Typical Cross Sections – Neighborhood Collectors 1 and 2 ..... RS-06
Typical Cross Sections – Local 1 (No Parking), Local 2 (Parking Both Sides) and Local 3 (Parking One Side) RS-07
Typical Trail Cross Section RS-08

DW - Drinking Water Systems

Transition Coupling DW-01
Gate Valve DW-02
Air Release Valve DW-03
Hydrant Assembly DW-04
Tracer Wire Bolted Connection DW-05
Water Main Reaction Blocking DW-06
Water Main Restrained Piping DW-07
Cross Tap Configuration DW-08
Valve Placement at Intersections DW-09
Meter Pit Easement DW-10
Water Service Benching DW-11
Combined Fire Domestic Service & Meter Vault DW-12
Compound Metering and Meter Pit DW-13

SW - Stormwater and Drainage Systems

Drainage Swale with Underdrain SW-01
Underdrain Lateral in Rear of Lot SW-02
French Drain SW-03
Hybrid Ditch Trench SW-04
Modified Hybrid Ditch Trench SW-05

Hybrid Ditch Trench at Inlet SW-06
Hybrid Ditch Trench Profile SW-07
Metal Pipe End Section SW-08
Precast Concrete End Section SW-09
Trash Guard SW-10
Standard Storm Manhole SW-11
Type 1 Storm Manhole SW-12
Inlet Type A SW-13
Yard Inlet SW-14

SS - Sanitary Sewer Systems

Sanitary Lateral for Shallow Sewers (Less than 15' Deep) SS-01
Sanitary Lateral for Deep Sewers (15' Deep and Over) SS-02
Type 1 Cleanout SS-03
Type 2 Cleanout SS-04
Type 3 Cleanout SS-05
New Service Connection to Existing Sanitary Sewer SS-06
Standard Sanitary Manhole SS-07
Shallow Sanitary Manhole SS-08
Type 1 Sanitary Manhole SS-09
Standard Manhole Benches SS-10
Precast Concrete Adjusting Ring SS-11
Sanitary Manhole over Existing Sanitary Sewer SS-12
Inside Drop Sanitary Manhole SS-13
Outside Drop Sanitary Manhole SS-14
Existing Manhole Connection SS-15

WW - Wastewater Force Main and Lift Station Systems

Air/Vacuum Release Valve & Vault WW-01
Force Main Reaction Blocking WW-02
Force Main Restrained Piping WW-03
Force Main Connection at Manhole WW-04
Lift Station Site Layout WW-05
Lift Station Plan - At Grade WW-06
Lift Station Plan - Sub-Grade WW-07
Lift Station Section A-A WW-08
Lift Station Section B-B WW-09
Lift Station Electrical Equipment WW-10
Lift Station One-Line Diagram WW-11

TECHNICAL SPECIFICATIONS

DIVISION 1
GENERAL REQUIREMENTS

TABLE OF CONTENTS

Section 01010 – Summary Items ..... 6 Pages

TOWN OF Brownsburg

MAY 2013

SECTION 01010 - SUMMARY ITEMS

PART 1 - GENERAL

1.01 General Items

A. The standard details and specifications for the Town of Brownsburg (Town) apply to all infrastructure construction. The applicable standard details and specifications shall be incorporated into the construction plans for all projects in the Town.

B. The Town must approve all materials and any proposed deviations from the construction standards prior to construction and installation.

C. One set of plans "approved" by the Town and the Indiana Department of Environmental Management (IDEM), if applicable, shall be maintained on the job at all times.

D. Notify the Town a minimum of 48 hours prior to commencement of construction activities within 40 feet of a Town sanitary force main.

E. Trenchless installation methods shall be used for all waterway crossings unless otherwise approved by the Town and any State or Federal permitting authority.

F. For roadway crossings, installation method (open trench and trenchless methods) must be approved by the Town and any applicable permitting authority prior to construction.

G. Sump pump discharge piping shall connect to a piped stormwater conveyance or discharge over the ground to a swale or ditch. A sump pump shall not discharge over a sidewalk or to a street or paved surface. Upon approval by the Town, a French drain may be used when soil conditions will promote infiltration into the ground and other alternatives are not available.

1.02 Contact information for the Town of Brownsburg:

Town Administration	317-852-1120
Planning & Building Department	317-852-1128
Water Department	317-852-1138
Wastewater Department	317-852-1114
Street Department	317-852-1113
Stormwater Department	317-852-1128
Police Department	317-852-1109
Brownsburg Fire Marshal	317-852-1190
After Hours (Non-Emergency)	317-852-1100
Emergency	911

1.03 Meetings

A. A pre-construction conference must be scheduled with the Town a minimum 48 hours prior to commencement of construction.

B. Pre-construction conference shall be scheduled through the Planning & Building Department at 317-852-1128.

C. No work shall begin prior to pre-construction meeting with the Town.

1.04 Submittals

A. Construction Schedules

1. Progress schedules are to be submitted by the Contractor to the Town prior to construction.
2. Provide complete sequence of construction by activity showing dates for beginning and completion of each element of construction.

B. Products and Materials

1. All materials furnished by the Contractor to be incorporated in the work shall be subject to inspection and approval by the Town prior to installation.
2. Product data shall be submitted to the Town for all utility pipe, utility structures, precast concrete structure coatings and sealants, manhole and catch basin frames and covers, hydrants, valves, casing pipe, all lift station equipment, concrete, asphalt and all associated materials necessary for a complete installation. Such data shall be of sufficient detail to enable the Town to identify the particular product in question and determine its conformance to the Town's requirements. Mark each copy to identify applicable products, models and options to be supplied.
3. Provide sufficient number of copies of each submittal to the Town such that there is sufficient quantity for the Town to retain 3 copies.

C. As-Built Drawings

1. Provide "as-built" drawings within 30 days of completion of the utility construction. Failure to provide as-built drawings will be handled according to the Town Subdivision Control Ordinance (§ 154.067).
2. Provide digital and hard copy sets of as-built drawings in accordance with the "Town of Brownsburg Digital As-Built Submittal Guidelines".
3. Include all pond elevation grading; building pad elevations; and installed water, sanitary sewer, force main and storm sewer utility lines and structures, hydrants, valves, meters, service laterals (sanitary and drainage located by a distance from manhole), and all existing gas and electric utility locations on as-built drawings in accordance with the Town Zoning Ordinance (§ 155.061).

1.05 Coordination

A. Give the Town a minimum of 48 hours notice prior to commencement of construction.

B. No water or sewer system construction may begin until approval from IDEM has been received by the Town.

C. Coordinate work with other Contractors and the Town. Select order of work and establish schedule or working hours for construction, subject to approval of Town which will assure orderly and expeditious progress of work.

D. Maintain existing service affected by Contractors' operations under the contract. Schedule construction to minimize interruptions to existing services and inconvenience to others.

E. Locate all existing utilities prior to commencement of construction. Call Indiana811 at 811 or 1-800-382-5544.

F. Street closures must be approved by the Town prior to beginning work.

G. Notify the Town immediately upon the event of damage to any public street during the course of the work and requiring closure thereof. Contractor shall be responsible for repair and costs as determined by the Town.

H. Notify the Town immediately upon event of damage to any Town utility line. Contractor shall be responsible for repair and costs as determined by the Town. A representative from the Town must be on-site to inspect repair prior to backfill.

I. Provide bonds as required by the Subdivision Control Ordinance.

1.06 Local Labor and Materials

A. Whenever possible, the Contractor, his subcontractors, material, men, or others who employ labor, shall employ labor locally.

B. Purchase materials such as sand, cement, gravel, pipe, steel, lumber, etc., from local dealers wherever such local dealers' prices meet competition’s and where such materials meet the Specifications.

1.07 Quality Control

A. All materials and each part or detail of the work shall be subject to inspection by the Town at all times. The Town shall be allowed access to all parts of the work and shall be furnished with such information and assistance by the Contractor as is required to make a complete and detailed inspection.

B. Provide quality-control services specified as required.

1. Where services are indicated as Contractor's responsibility, engage a qualified testing agency to perform these quality-control services.

2. Where quality-control services are indicated as Contractor's responsibility, submit a certified written report, in duplicate, of each quality-control service.

1.08 Temporary Facilities

A. Provide the following temporary facilities:

1. Sanitary facilities
2. Trash Containers
3. Barricades and enclosures
4. Bulletin Board (for required notices and postings)

B. Sanitary Facilities

1. Provide sanitary facilities for use of all construction personnel including those of other contractors for the duration of the project as follows:
   a. Chemical units complete with weathertight enclosure adequately ventilated and equipped with latching door.
   b. Maintain chemical units weekly or at lesser periods if determined necessary. Chemical units shall be in accordance with all applicable rules and regulations.
   c. Furnish toilet paper and hand sanitizer for the chemical units and replenish supply whenever required.

C. Trash Containers

1. Provide a trash container for the disposal of packaging materials, pieces of broken pipe, rubbish, trash and other debris.
2. Empty trash containers as often as necessary to prevent overflowing, but not less than one time per week.

D. Barricades

1. Provide, erect and maintain all necessary barricades, suitable and sufficient danger signals and signs.
2. Take all necessary precautions for the protection and safety of the public, workmen, structures and equipment. Roads closed to traffic shall be protected by effective barricades. Obstructions shall be illuminated during hours of darkness.
3. Erect warning signs in advance of any location on the project where operations may interfere with the use of the road by traffic and at all intermediate points where the new work crosses or coincides with the existing road. Construct and erect warning signs in accordance with the Federal Highway Administration’s Manual on Uniform Traffic Control Devices (MUTCD) and the Indiana Supplement, latest editions.

1.09 Rights of Access

A. Representatives of the Town, Environmental Protection Agency and the State of Indiana shall have access to the work wherever it is in preparation or progress and that the Contractor will provide facilities for such access and inspection.

1.10 Safety and Health Regulations for Construction

A. The Contractor shall be solely responsible for all obligations prescribed as employer obligations under Chapter XVII of Title 29, Code of Federal Regulations, Part 1926, otherwise known as "Safety and Health Regulations for Construction and CFR Part 1910.46 Permit Required for Confined Space".

B. Upon request, provide the Town with the name of the Contractor's Safety Officer, plus the on-site Safety Representative, if other than the Superintendent.

1.11 Operations within Right-of-Way

A. In public thoroughfares, all operations of the Contractor, including those of temporary nature, must be confined within the applicable right-of-way limits.

B. If the methods of the construction are such as to require the use of land beyond the public thoroughfares, Contractor shall make his own arrangements with the property owners affected for the use of such additional land. Such additional agreements will not include any liability for the Town.

C. Perform all construction in existing roadways between the hours of 9:00 am and 2:00 pm.

1.12 Permits

A. The Developer shall obtain all permits which are related to the design and construction of the completed facilities. Permits to be obtained by the Developer include, but are not limited to, permits from the following:

1. Town of Brownsburg
2. Hendricks County
3. Indiana Department of Environmental Management
4. Indiana Department of Homeland Security Fire and Building and Safety Division
5. Indiana Department of Natural Resources
6. U.S. Army Corps of Engineers

B. The construction shall be performed in full accordance with any and all permit requirements.

PART 2 - PRODUCTS

Not Used.

PART 3 - EXECUTION

3.01 Site Maintenance

A. The working area shall be kept free, at all time, of tools, materials, and equipment not essential to the work in progress. Debris, waste materials, and rubbish shall not be allowed to accumulate and shall properly be disposed. On site burning of trash and debris is prohibited. On-site burial of trash and debris is prohibited.

B. If the site owner should fail to maintain the project site, the Town shall make the necessary arrangements to clean up the site at the owner's expense. If such action becomes necessary, in the opinion of the Town, the Town shall not be responsible for the inadvertent removal of materials which the owner would not have disposed of had he affected the required clean up.

C. Where material or debris has washed, flowed, blown, or been purposely deposited into watercourses, drains, ditches, inlets, or elsewhere as a result of the construction operation, such material or debris shall be entirely removed and satisfactorily disposed of immediately upon identification.

D. The site owner shall be responsible to restore or replace any public or private property damaged by operations, equipment, or employees to a condition at least equal to that existing immediately prior to beginning the project.

E. The site owner shall be responsible to maintain and mow property, including all easements, right-of-ways, and common areas. If the site owner should fail to maintain the project site, the Town of Brownsburg shall make the necessary arrangements to mow the site at the site owner's expense.

PART 4 - FIGURES

Not Used.

END OF SECTION 01010

TECHNICAL SPECIFICATIONS

DIVISION 2
TECHNICAL REQUIREMENTS

TABLE OF CONTENTS

Section 02100 – Subgrade Treatment ..... 3 Pages
Section 02101 – Erosion and Sediment Control and Stormwater Pollution Prevention ..... 7 Pages
Section 02130 – Flowable Backfill ..... 3 Pages
Section 02200 – Earthwork ..... 6 Pages
Section 02220 – Trenching, Backfilling and Compaction for Utilities ..... 8 Pages
Section 02224 – Trenchless Excavation – Horizontal Borings ..... 5 Pages
Section 02226 – Trenchless Excavation – Directional Drilling ..... 6 Pages
Section 02500 – Paving and Surfacing ..... 17 Pages
Section 02501 – Standards of Roadway Geometric Design ..... 7 Pages
Section 02502 – Standards of Roadway Construction ..... 5 Pages
Section 02504 – Adjacent Roadway Improvements ..... 2 Pages
Section 02505 – End of Roadway ..... 1 Page
Section 02506 – Signage ..... 2 Pages
Section 02660 – Water Mains ..... 14 Pages
Section 02661 – Water Services ..... 7 Pages
Section 02675 – Disinfection ..... 5 Pages
Section 02710 – Underdrain Systems ..... 5 Pages
Section 02715 – Hybrid Ditch Systems ..... 8 Pages
Section 02720 – Storm Sewer Systems ..... 15 Pages
Section 02730 – Gravity Sanitary Sewer Systems ..... 12 Pages
Section 02732 – Testing Sanitary Sewers and Force Mains ..... 8 Pages
Section 02737 – Force Main Sewer Systems ..... 10 Pages
Section 02738 – Composite Lining System ..... 9 Pages
Section 02739 – Submersible Lift Station ..... 22 Pages
Section 02960 – Bioretention ..... 8 Pages
Section 03500 – Roller Compacted Concrete Pavements (RCC) ..... 11 Pages
Section 03501 – Full Depth Recycling (FDR) ..... 4 Pages
Section 03502 – Pervious Concrete ..... 4 Pages
Section 04950 – Preservative Seal ..... 6 Pages
Section 13550 – Emergency Preemption (GPS) ..... 12 Pages
Section 13560 – Ornamental Lighting ..... 1 Page
Section 13575 – Pedestrian Push Button System ..... 1 Page

TOWN OF Brownsburg

MAY 2013

SECTION 02100 – SUBGRADE TREATMENT

PART 1 - GENERAL

1.01 General Items

A. This specification applies to all pavement types receiving subgrade treatment, including, but not limited to, roads, drives, trails, paths, sidewalks, parking areas, or any other facility designed to carry pedestrian or vehicular traffic.

B. Soils must be tested to determine suitability for subgrade treatment, and if suitable, the method for treating the subgrade. Soils containing greater than 3% by dry weight calcium, magnesium carbonate or organic material, or with a maximum dry density of less than 100 lb/cu ft, or with liquid limit of greater than 50, will not be permitted within the specified thickness of the subgrade treatment in cut sections and will not be permitted within 24 in. of the finished subgrade elevation in fill sections. Density shall be determined in accordance with AASHTO T 99 and loss of ignition shall be determined in accordance with AASHTO T 267. Liquid limits shall be determined in accordance with AASHTO T89.

C. All rock greater than 6 in. shall be removed or broken off at least 6 in. below the subgrade surface. Holes or depressions resulting from the removal of unsuitable material shall be filled with an acceptable material and compacted to conform with the surrounding subgrade.

D. During subgrade preparation, adequate drainage shall be provided at all times to prevent water from standing on the subgrade.

E. Even though the subgrade has been previously accepted, the condition of the subgrade at the time paving material is placed shall be in accordance with INDOTSS 105.03 and 207.04. Just prior to placing the base course on the subgrade, proofrolling in accordance with INDOTSS 203.26 shall be completed. If limits of the work make mechanical preparation of the subgrade impractical, appropriate hand methods may be used.

F. The subgrade treatment type shall be as specified on the contract plans. Within each of the following subgrade treatment types, the Contractor shall choose from the listed options for each type.

1. Type I. 14 in. chemical soil modification, 12 in. of the subgrade excavated and replaced with coarse aggregate No. 53, or by 24 in. of soil compacted to density and moisture requirements.
2. Type IA. 14 in. (350 mm) chemical soil modification or 12 in. of the subgrade excavated and replaced with coarse aggregate No. 53.
3. Type IB. 14 in. chemical soil modification.
4. Type IC. 12 in. of the subgrade excavated and replaced with coarse aggregate No. 53.

5. Type II. 8 in. chemical soil modification, 6 in. of the subgrade excavated and replaced with coarse aggregate 100 No. 53, or 12 in. of soil compacted to density and moisture requirements.
6. Type IIA. 8 in. chemical soil modification or 6 in. of the subgrade excavated and replaced with coarse aggregate No. 53.
7. Type III. 6 in. of soil compacted to the density and moisture requirements, or 6 in. of subgrade excavated and replaced with coarse aggregate No. 53.
8. Type IIIA. 6 in. of subgrade excavated and replaced with coarse aggregate No. 53.
9. Type IV. 9 in. of the subgrade excavated and replaced with coarse aggregate No. 53 on GeoGrid.
10. Type V. 3 in. (75 mm) of subgrade excavated and replaced with 3 in. coarse aggregate No. 53.

G. If subgrade treatment type is not specified, or soils different than used for the design are encountered, a third party testing laboratory shall be engaged at the Contractor's expense to test the soils encountered and specify the treatment type necessary to comply with the design.

H. Chemical soil modification materials and methods shall be specified by an independent testing laboratory, as designed, or at the contractor's expense.

I. Where the density and moisture control option is used, compaction of embankment areas shall be in accordance with INDOTSS 203.23. In cut and transition areas, the top lifts shall be removed, and the bottom 6 in. compacted in-place to comply with the specified density and moisture requirements. The excavated material shall then be replaced and compacted in 6 in. lifts to comply with the specified density and moisture requirements. Removal of the upper lifts may be waived and only the upper 6 in. treated in accordance with INDOTSS 207.03 when it is determined, through testing in accordance with INDOTSS 203.24, that the lower lifts comply with the specified density and moisture requirements.

J. Any areas not passing a proofroll after stabilization shall be repaired by methods acceptable to the Town of Brownsburg, at the contractor's expense, until it passes a proofroll immediately prior to paving.

PART 2 - PRODUCTS

Not Used.

PART 3 - EXECUTION

Not Used.

PART 4 - FIGURES

Not Used.

END OF SECTION 02100

SECTION 02101 - EROSION AND SEDIMENT CONTROL AND STORMWATER POLLUTION PREVENTION

PART 1 - GENERAL

1.01 Summary

A. Section Includes: Furnishing, installing, and maintaining all temporary and permanent control measures as shown on the Drawings, required by permits, and ordered by the Town during the land disturbing activity.

1.02 References

A. Indiana Administrative Code (IAC), latest edition

B. Indiana Department of Transportation (INDOT) Standard Specifications, latest editions

1. Section 904 - Aggregates
2. Section 918 - Soil Fabrics

1.03 Definitions

A. Stabilized Areas: Disturbed areas which have established a minimum 70 percent uniform density of perennial vegetation coverage.

1.04 Submittals

A. Design Plans

1. Include a note on the design plans stating, "The Town of Brownsburg reserves the right to require additional onsite controls as deemed necessary to maintain compliance with 327 IAC 15-5 (Rule 5) and the Town's Stormwater Management Ordinance. All erosion and sediment controls, best management practices and pollution prevention measures must be installed and maintained in accordance with the Indiana Stormwater Quality Manual."

B. Design Calculations

1. Turf Reinforcement Mat: Provide design calculations (i.e. flow velocity and shear stress) to demonstrate that the selected product is appropriate for the site conditions.

PART 2 - PRODUCTS

2.01 Products

A. Silt Fence

1. Posts shall be either 2-inch diameter wood or equivalent metal posts with a minimum length of 5 feet. Metal posts shall have projections for fastening wire to them.
2. Anchor stakes shall be 1-inch by 2-inch wood stakes or equivalent metal stakes with a minimum length of 1.5 feet.
3. Provide wire fence reinforcement for silt fences using standard strength filter cloth. Wire fence reinforcement shall be a minimum of 42 inches in height, be a minimum of 14 gauge, and have a maximum mesh spacing of 6 inches.
4. The fabric shall be purchased in a continuous roll, cut to the length of the barrier, to avoid the use of joints. When joints are necessary, splice filter fabric together only at a support post, wrap filter fabric around post to join, and seal securely.
5. Filter tubes or filter socks may be substituted for silt fence.

B. Filter Tubes or Filter Socks

1. Filter tubes or filter socks are used to filter sediment-laden runoff for sheet flow areas and may also be used across a swale as a check-dam.
2. Specify the tube/sock size on the plans based on anticipated flow and site conditions.
3. Provide a product that is made of a permeable netting filled with aggregate, compost or wood fibers.

C. Topsoil

1. Use material for topsoil that is natural, fertile soil and capable of sustaining vigorous plant and lawn growth.
2. Topsoil must be free of stones, lumps, clods, sticks larger than one inch, sod, live plants and roots, and other extraneous matter.

D. Erosion Control Blanket

1. Use an erosion control blanket product that is made of natural mulch materials and has a quickly degrading net material (less than 12 months degrading time).

E. Turf Reinforcement Mat

1. Turf reinforcement mat is a three-dimensional matrix of polypropylene, nylon or other non-degradable material used to reinforce plant rooting system and the underlying soil material.
2. The use of turf reinforcement mat is preferred (as opposed to riprap or other hard armoring) to reinforce vegetation and prevent erosion and scouring in

areas of concentrated flow, on interior pond slopes, at storm sewer outfalls and on steep slopes.

F. Riprap

1. Provide Revetment, Class 1, or Class 2 riprap in accordance with INDOT Standard Specification Section 904.
2. All riprap placed for pipe and outfall protection shall be contained in gabion baskets. Provide gabion baskets constructed of welded wire fabric or triple twisted wire fabric.

G. Geotextile for Use under Riprap

1. Provide non-woven needle punched or heat bonded geotextile consisting of strong, rot-resistant, chemically stable long-chain synthetic polymer materials which are dimensionally stable relative to each other.
2. Furnish geotextile which meets or exceeds INDOT Standard Specification Section 918.

PART 3 - EXECUTION

3.01 General

A. The site owner as identified in the stormwater permit shall be responsible for maintenance of soil erosion and sediment control measures throughout all phases of construction, and until final build-out of project is entirely complete, and no other land disturbing activities will occur (per 327 IAC-5-7.5). The site owner shall be responsible to ensure that individual lot owners, subcontractors, developers and any other entities performing land disturbing activities comply with the approved construction plan. The project site owner shall maintain overall responsibility and shall be the point of contact regarding Rule 5 compliance issues until the notice of termination is filed with IDEM.

B. Submit notice of termination (NOT) inspection request to Town prior to filing NOT with IDEM.

C. The Town will not perform building site inspections if erosion and sediment control plans are not adequately implemented.

3.02 Individual Building Lots

A. The individual lot operator, whether owning or acting as the agent, shall be responsible for erosion and sediment control requirement associated with activities on individual lots.

B. Divert stormwater runoff away from the building by grading the lawn to provide at least 6 inches of vertical fall in the first 10 feet in horizontal distance.

C. Install and maintain stable construction entrance in the proposed driveway location by using No. 2 washed stone. Maintain by adding fresh stone.

D. Clean up sediment that is tracked or washed onto roads daily. Flushing roads with water is not acceptable. Cleared sediment shall be redistributed or disposed of in a manner that is in compliance with all applicable statutes and rules.

E. Adjacent lots disturbed by an individual lot operator shall be repaired and stabilized with permanent surface stabilization. Side yard swales shall be graded as specified in the plans.

F. Final stabilization is met when all land disturbing activities have been completed and a uniform perennial vegetative cover with a density of 70 percent or greater has been established on all unpaved areas and areas not covered by permanent structures, or equivalent permanent stabilization measures have been employed.

G. Rear yard swales are not to be disturbed following final grading of swale. Install erosion control blanket over seed to reestablish vegetation in disturbed swales.

H. Place perimeter protection inside drainage easement lines.

3.03 Installation and Maintenance

A. Silt Fence

1. The static slicing method is the preferred method for installing silt fence.
2. When trenching is implemented, place excavated material on the upslope side. In no instance is excavated material to be placed on the downslope side.
3. When standard strength filter fabric is used with a wire mesh support fence, fasten the filter fabric securely to the upslope side of the posts using heavy duty 1-inch wire staples, tie wires, or hog rings. The wire mesh and filter fabric shall extend into the trench a minimum of 2 inches and shall not extend more than 36 inches above the original ground surface.
4. When standard strength filter fabric is used without a wire mesh support fence, fasten the filter fabric securely to the upslope side of the posts using heavy duty 1-inch wire staples, tie wires, or hog rings. The filter fabric shall extend into the trench a minimum of 8 inches and shall not extend more than 36 inches above the original ground surface.
5. Do not staple filter fabric to existing trees.
6. Backfill the trench and compact the soil over the filter fabric on the upslope side.
7. Turn the ends of each silt fence segment in the uphill direction to collect sediment. This is commonly called "J-hook installation" or "hooking".
8. Remove silt fences when they have served their useful purpose, but not before the upslope area has been permanently stabilized.
9. Silt fence shall not be used as a diversion and shall not be installed across a pipe opening, stream, channel, ditch, swale, or other waterway.
10. Inspect silt fence barriers after each rainfall and at least daily during prolonged rainfall. Make any required repairs immediately.
11. Should the fabric decompose or become ineffective prior to the end of the expected usable life and the barrier is still necessary, replace the fabric promptly.

12. Inspect for sediment deposits after each storm event. Remove sediment deposits when the deposits reach approximately half the height of the barrier.
13. Any sediment deposits remaining in place after the silt fence is no longer required shall be dressed to conform to the finished grade.

B. Filter Tubes or Filter Socks

1. If more than one tube/sock is used in a row, the ends must overlap.
2. Hold tube/socks in place by driving post through the center.
3. If a trench must be dug for installation of the tube/sock, excavated material must be placed on the upslope side. In no instance is excavated material to be placed on the downslope side.
4. Install product according to manufacturer's instructions

C. Inlet Protection

1. Install inlet protection at all stormwater inlets within the construction area, or in areas that receive runoff from disturbed areas, to prevent sediments, construction debris, and other potential stormwater pollutants from entering storm sewer inlets and catch basins.
2. For inlets within a road or driving lane inlet protection must be installed below the grate and be equipped with an overflow or bypass so that ponding water does not cause unsafe driving conditions.
3. After every rain event, inspect all inlet protection and remove accumulated sediment and debris collected by inlet protection practices and dispose of properly.
4. When cleaning or removing inlet protection, do not place sediment and debris in a ditch, stream, wetland, waterway or stormwater conveyance.
5. Inlet protection is to remain until land disturbing activities are complete and the upstream drainage areas are stabilized.

D. Erosion Control Blanket

1. Where construction disturbs slopes equal or steeper than 3 to 1 or within areas of concentrated flow, protect bare slopes with an erosion control blanket to prevent soil erosion.
2. When vegetation is to be established, follow requirements of Article 3.05. Place erosion control blanket over the seed. Anchor the blanket according to manufacturer's instructions to prevent the seed from washing away.
3. Use erosion control blanket in all back yard swales.
4. Install erosion control blanket in swales or ditches from top of bank to top of bank according to manufacturer's instructions. Overlap ends of adjacent blankets and trench or slice ends into the soil.

E. Turf Reinforcement Mat

1. Install product according to manufacturer's instructions.

F. Riprap Gabion Baskets

1. Place riprap gabion baskets over geotextile in accordance with these Specifications and in conformance with the lines, grades, and locations indicated on the Drawings.
2. Assemble and install gabion baskets in accordance with manufacturer's instructions.
3. Install continuous lacing wire for full length of basket.
4. Any riprap gabion basket damaged during installation shall be replaced.

3.04 Managing Stockpiles

A. Manage soil stockpiles for wind erosion, stormwater erosion and sediment control.

B. Temporarily or permanently stabilize stockpiled soil that is scheduled or likely to be left inactive for 15 days or more with measures appropriate for the season in order to minimize erosion potential.

C. Position stockpiles away from any ditch, stream, wetland, or stormwater conveyance.

D. Install a stable construction drive if necessary to prevent tracking of soil onto roadways.

3.05 Establishing Vegetation

A. Stabilize all unpaved surfaces and areas not covered by permanent structures with permanent perennial vegetation.

B. Prior to seeding, disturbed areas must be graded to final grade and receive a minimum of 4 inches of topsoil.

C. Scarify the planting area to a minimum depth of 6 inches. Mix soil amendments such as fertilizer and lime if required, in the top 2 to 4 inches of topsoil with a disk or rake operated across the slope.

D. Apply seed uniformly and cover newly seeded areas with mulch or erosion control blanket. Mulch shall be anchored, crimped or applied with tackifiers to hold the mulch in place. Hydroseeding is an acceptable alternative method.

E. Keep seeded and fertilized areas adequately watered until germination of seed is completed and uniform grass cover is accomplished at a minimum of 70 percent density of vegetation coverage.

PART 4 - FIGURES

4.01 Associated Standard Details

Detail No.	Description
EC-01	Individual Building Lot
EC-02	Silt Fence

END OF SECTION 02101

SECTION 02130 – FLOWABLE BACKFILL

PART 1 - GENERAL

1.01 Summary

A. Flowable backfill shall be “removable” in accordance with INDOTSS 213, as amended herein.

1.02 Description

A. This work shall consist of placing a flowable, self-leveling, controlled low strength, cementitious backfill material in trenches for pipe structures, culverts, utility cuts, other work extending under pavement locations, cavities beneath slopewalls and other locations in accordance with INDOTSS 105.03. The material shall have an unconfined compressive strength between 50 and 100 psi.

1.03 Flowable Materials

A. Materials shall be in accordance with the following INDOT specification sections:

Concrete Admixtures*	912.03
Fine Aggregate	904.02(a)
Fly Ash	901.02
Portland Cement	901.01(b)
Water	913.01

* Other admixtures that increase flowability may be used as approved by the Town of Brownsburg.

B. The supplier may elect to use nominal size No. 23 and No. 24 gradations in accordance with INDOTSS 904.02(h) or may propose the use of alternate gradations. The alternate gradation and proposed tolerances of material passing each sieve shall be included in the flowable backfill mix design.

1.04 Flowable Backfill Mix Design

A. The Contractor shall submit a flowable backfill mix design (FBMD) to the Town a minimum of 7 days prior to use. The FBMD will be accepted in accordance with INDOTSS 213.04. The FBMD shall be submitted in a format acceptable to the Town and shall include the following:

1. a list of all ingredients the source of all materials
2. the gradation of the aggregates
3. the batch weight (mass) with the aggregates at the SSD condition
4. the names of all admixtures
5. the admixture dosage rates and manufacturer’s recommended range

B. A FBMD in accordance with these specifications, which has been approved for use on a previous contract, may be submitted to the Town for approval. The submittal shall include copies of test results in accordance with INDOTSS 213.04

and 213.05. Changes in the FBMD will not be allowed except for adjustments to compensate for routine moisture fluctuations or a change in sand source in accordance with INDOTSS 213.05 based on the dry flow determined from the trial batch testing. All other changes will require a new FBMD.

1.05 Flowable Backfill Mix Criteria

A. The FBMD shall produce a workable mixture with the following properties:

1. Flow Consistency
   a. Flow consistency will be measured in accordance with ASTM D 6103. The diameter of the spread shall be at least 8 in. (200 mm).
2. Lightweight Dynamic Cone Penetration Blow Count Number
   a. A lightweight dynamic cone penetration test will be performed in accordance with ITM 216 after the flowable backfill mix has cured for 3 days. The average penetration resistance blow count number for removable flowable backfill shall not be less than 12 nor greater than 30.
3. Removability Modulus
   a. The removability modulus, RM, will be determined for the FBMD by the formula as follows:

$$RM = 0.000104\left(U_W\right)^{1.5}\sqrt{1.72N_{14} - 15.64} \qquad \text{(English Units)}$$

where:
N_{14} = average lightweight dynamic cone penetration blow count after 14 days in accordance with Indiana Test Method (ITM) 216.
Uw = dry unit weight, lb/cu ft, of flowable backfill after 14 days in accordance with ITM 218. The RM shall be 1.0 or less for removable flowable backfill.

1.06 Flowable Backfill Trial Batch

A. The first time a specific mix design is submitted to the Town, a trial batch shall be produced by the Contractor and will be tested by an independent testing firm, at the Contractor's expense, to verify that the FBMD meets the flowable backfill mix criteria. Mix designs meeting these requirements will be approved for future use on Town projects.

PART 2 - PRODUCTS

Not Used.

PART 3 - EXECUTION

3.01 Placement

A. The flowable backfill shall not be placed on frozen ground. Flowable backfill shall be protected from freezing for 72 hours. Flowable backfill shall not be placed into

or through standing water unless approved by the Town of Brownsburg in writing. The diameter of the flowable backfill spread shall be at least 8 in. at time of placement. Water may be adjusted from the FBMD 120 to meet the minimum spread requirement if the initial measured spread is between 7 and 8 in.

B. The flowable backfill shall be brought up uniformly to the fill line as shown on the plans or as directed. When used as structure backfill, flowable backfill shall be placed uniformly so as not to induce unbalanced loading on any part of a structure. The flowable backfill shall not be subjected to load nor disturbed by construction activities until a lightweight dynamic cone penetration test has produced a blow count of seven (7) or greater.

PART 4 - FIGURES

Not Used.

END OF SECTION 02130

SECTION 02200 - EARTHWORK

PART 1 - GENERAL

1.01 Summary

A. Section Includes: Stripping, storage and redistribution of topsoil, cut and fill operations, rough and finish grading and construction of drainage swales as applicable in conformity with the lines and grades and slopes as shown on the Drawings.

B. Related Sections

1. Section 02101 - Erosion and Sediment Control and Stormwater Pollution Prevention

1.02 References

A. American Society for Testing and Materials (ASTM), latest editions

1. ASTM D698 - Standard Test Methods for Laboratory Compaction Characteristics of Soil Using Standard Effort (12,400 ft-lbf/ft^3 (600 kN-m/m^3))

1.03 Submittals

A. Design Data

1. Velocity and scour calculations for drainage swales and ditch lining

B. Test Results

1. Compaction testing results

1.04 Warranty

A. Refill and restore to the original grade settlement in the backfill which takes place within the warranty period at no additional cost to the Town. Restore the surface area where settlement has occurred, including, but not limited to seeding, fertilizing, erosion control and restoration of streets, drives, yards, and sidewalks.

B. Guarantee all disturbed and replaced trees and shrubs during the warranty period.

PART 2 - PRODUCTS

2.01 Materials

A. Excavated Material

1. Suitable earth removed from the excavation, free of rocks, boulders, stones larger than 2 inches in diameter, and other debris.
2. Topsoil and soil containing decomposed organic materials shall be considered suitable for topsoil fill material only.
3. Aeration of some backfill may be required for compaction.

B. Granular Fill

1. Clean granular material including sand and pit run gravel.
2. Granular fill material shall contain a maximum 2 percent, by weight, passing a No. 220 sieve and 100 percent passing a 3/4-inch sieve.

C. Topsoil

1. Topsoil shall meet the requirements of Section 02101 - Erosion and Sediment Control and Stormwater Pollution Prevention.

D. Drainage Swale and Ditch Lining

1. Provide turf reinforcement mat or other vegetative products, where possible. Furnish material in accordance with Section 02101 - Erosion and Sediment Control and Stormwater Pollution Prevention.
2. Provide riprap or other hard armoring where approved by the Town. Furnish material in accordance with Section 02101 - Erosion and Sediment Control and Stormwater Pollution Prevention.

2.02 Excavation Classification

A. This work shall consist of excavation, hauling, disposal, or compaction of all materials encountered within the limits of the work. All excavation will be classified as hereafter described.

1. Common Excavation: Common excavation shall consist of all excavation not included as rock excavation or excavation which is otherwise classified.
2. Rock Excavation: Rock excavation shall consist of igneous, metamorphic, and sedimentary rock which cannot be excavated without blasting, or the use of a modern power shovel of no less than one cubic yard capacity, properly used, having adequate power and in good running condition, or the use of other equivalent power equipment. It shall also include all boulders or detached stones each having a volume of one half (1/2) cubic yard or more.
3. Unclassified Excavation: Unclassified excavation shall consist of the excavation and disposal of all materials of whatever character encountered in the work.

4. Borrow: Borrow shall consist of approved material required for the construction of embankments or for other portions of the work and shall be obtained from offsite and in accordance with all local, state, and federal regulations. Unless otherwise designated in the contract, the Contractor shall make his own arrangements for obtaining borrow and shall pay all costs involved. All Contractor operations including erosion and sediment control shall be conducted in accordance with all local, state, and federal regulations.

PART 3 - EXECUTION

3.01 Preparation

A. Remove all topsoil at construction areas. Stockpile topsoil for use in finish grading operation. Do not use topsoil for fill.

B. No fill materials shall be placed until the subgrade and construction has been inspected and approved by the Town.

3.02 Excavation

A. Keep open excavations free of water, both surface and subterranean by use of pumps and earth damming around such excavations to drain surface water away from the excavations.

B. Provide and maintain adequate dewatering equipment to remove and dispose of surface and ground water entering excavations. Use diversion ditches, dikes or other suitable means to prevent surface water from entering the excavation and to provide adequate drainage of the area adjacent to the excavation. Filter the water from dewatering operations to remove sediment before discharge.

C. Protect open excavations by roping areas off, or with barricades or railings to prevent injury to personnel. Contractor shall be responsible to comply with any and all applicable Occupational Safety and Health Administration (OSHA) regulations.

D. Excavate true to line and grade, and level at bottom of the excavation. Excavate to undisturbed, structurally stable subsoil. Contractor shall notify Town where excavation, in order to reach such subsoil, must continue deeper than required by the elevations indicated on the Drawings.

E. Excavations shall be of the dimensions indicated for new construction plus sufficient space as applicable to permit erection of forms, shoring, masonry, foundations, structure installations, and excavation inspections.

F. Excavation below structures shall be sufficient to permit placement of subbase material.

G. Foundations and Paved Areas

1. If suitable bearing subsoil is not encountered at the depth indicated on Drawings for valve vault, wet well, or other structure, immediately notify the Town. Do not proceed further until instructions are given by the Town and required tests are completed.
2. Structures shall not be placed on soft earth; if soft earth is encountered remove soft pockets. Backfill with lean concrete or compacted granular fill as specified in Article 3.04.

H. Provide shoring or piling as required to protect excavation bank.

3.03 Filling and Backfilling

A. All material entering the fill shall be free of organic matter such as leaves, grass, roots, and other objectionable material.

B. Suspend earthwork operations when satisfactory results cannot be obtained because of rain, freezing weather or other unsatisfactory conditions in the field.

C. Material in layers shall be of the proper moisture content before compaction. Should the material be too wet to permit proper compaction, all work on all portions thus affected shall be delayed until the material has dried to the required moisture content.

D. In the construction of filled areas, place starting layers in the deepest portion of the fill. As placement progresses, layers shall be constructed approximately parallel to the finished grade line.

E. Boulders, if encountered, must be disposed of outside of the construction area.

3.04 Compaction

A. Fill areas shall be compacted using equipment capable of compacting each lift its full depth. Moisture during compaction operations shall be maintained at optimum content.

B. Compacting equipment shall be approved equipment of such design, weight and quantity to obtain the required density in accordance with soil compaction requirements. Under no circumstances shall a bulldozer or similar tracked vehicle be used as compacting equipment.

C. Water distribution equipped with a suitable sprinkling devices shall be used to add moisture to the soil if required.

D. For fill areas around new structures: Continue compaction operations for up the top 12 inches of fill until the fill is compacted to not less than 95 percent Standard Proctor of the maximum dry density, and compact the final 12 inches of fill to not less than 100 percent Standard Proctor of the maximum dry density as determined in accordance with ASTM D698.

E. For paved areas and within 5 feet of paved areas: Place fill in 8-inch maximum balanced lifts and compact each layer to 95 percent of Standard Proctor dry density in accordance with ASTM D698, up to the top 12 inches of fill. Place the final 12 inches of fill in 6-inch maximum balanced lifts and compact each lift to 100 percent Standard Proctor dry density in accordance with ASTM D698.

F. For all other areas: Continue compaction until the fill is compacted to not less than 90 percent Standard Proctor of the maximum dry density, as determined in accordance with ASTM D698. Unless otherwise specified herein, fills shall be placed in successive horizontal layers of approximately 12 inches in loose depth for the full width of the section.

G. Areas inaccessible to roller shall be consolidated and compacted by mechanical tampers. The equipment shall be operated in such manner that hardpan, cemented gravel, clay, or other chunky soil material are broken up into small particles and become incorporated with the material in the layer.

H. Compaction by flooding is not acceptable.

3.05 Proof Rolling

A. Proof rolling shall be performed with a pneumatic-tire roller conforming to the requirements of INDOT Standard Specification Section 203. There shall be 2 complete coverages unless otherwise directed. Correct any and all roller marks, irregularities, and failures.

B. Proof roll subgrades below paved areas with heavy equipment prior to filling, consisting of one coverage of an earthmover.

C. After completion of filling and compaction operation, proof roll area with smooth wheel vehicle to leave a smooth surface sealed to shed all water.

3.06 Grading

A. Furnish, operate, and maintain equipment necessary to control uniform layers, section, and smoothness of grade for maximum compaction and drainage.

B. Rough Grading

1. Evenly grade to elevations 6 inches below the finish grade elevations indicated.
2. Protect all constructed items during grading operations, and repair if damaged.
3. All areas in the project including excavated and filled sections and adjacent transition areas shall be reasonably smooth, compacted, and free from irregular surface changes.
4. The degree of finish shall be that ordinarily obtainable from either blade-grader or scraper operations, except as otherwise specified.

5. The finished subgrade surface generally shall be not more than 0.3 feet above or below the established grade or approved cross-section, with due allowance for topsoil and seeding or sod as applicable.
6. The tolerance for areas within 10 feet of buildings shall not exceed 0.15 feet above or below the established subgrade.
7. All ditches, swales and gutters as applicable shall be finished to drain readily.
8. The subgrade shall be evenly sloped to provide drainage away from structures and building walls in all directions at a grade not less than 1/2 inches per foot.
9. Provide grade rounding at top and bottom of banks and at other breaks in grade.

C. Protection

1. Protect newly graded areas from the action of the elements.
2. Settlement or washing that occurs prior to acceptance of the work shall be repaired, and grades re-established to the required elevations and slopes.
3. Fill to required subgrade levels any areas where settlement occurs.

D. Finish Grading

1. Proceed to finish elevations shown on the Drawings with a tolerance of +/-0.04 feet (1/2 inch).
2. Rake subsoil clean of stones and debris. Scarify to depth of 3 inches.
3. Spread stockpiled topsoil over prepared subgrade to a minimum depth of 6 inches, and roll until suitable for seeding or placement of sod as applicable.
4. Maintain surfaces and replace additional topsoil necessary to repair erosion.

PART 4 - FIGURES

4.01 Associated Standard Details

Detail No.	Description
EW-01	Side Yard Swale
EW-02	Turf Armored Ditch
EW-03	Hard Armored Ditch
EW-04	Detention/Retention Ponds

END OF SECTION 02200

SECTION 02220 - TRENCHING, BACKFILLING AND COMPACTION FOR UTILITIES

PART 1 - GENERAL

1.01 Summary

A. Section Includes: Performing all excavation work as required for the installation of water mains, valves, hydrants, storm sewers, gravity sanitary sewers, force mains, structures, and appurtenances including necessary clearing, grubbing, excavation, trenching, bedding, backfilling, and other related work.

B. Related Sections

1. Section 02224 - Trenchless Excavation - Horizontal Borings
2. Section 02226 - Trenchless Excavation - Directional Drilling
3. Section 02660 - Water Mains
4. Section 02661 - Water Services
5. Section 02720 - Storm Sewer Systems
6. Section 02730 - Gravity Sanitary Sewer Systems
7. Section 02737 - Force Main Sewer Systems

1.02 References

A. American Society for Testing and Materials (ASTM), latest editions

1. ASTM D698 - Standard Test Methods for Laboratory Compaction Characteristics of Soil Using Standard Effort (12,400 ft-lbf/ft^3 (600 kN-m/m^3))

B. Indiana Department of Transportation (INDOT) Standard Specifications, latest edition

1. Section 904 - Aggregates

1.03 Definitions

A. Pavement Loading Zone: The area within 5 feet of any edge of pavement, curb, gutter, sidewalk, or similar structure.

1.04 Submittals

A. Test Results

1. Testing results for flowable fill
2. Compaction testing results for trench bedding
3. Compaction testing results for trench backfill

1.05 Warranty

A. Refill and restore to the original grade settlement in the backfill which takes place within the warranty period at no additional cost to the Town. Restore the surface

area where settlement has occurred, including, but not limited to seeding, fertilizing, erosion control and restoration of streets, drives, yards, and sidewalks.

B. Guarantee all disturbed and replaced trees and shrubs during the warranty period.

PART 2 - PRODUCTS

2.01 Bedding and Backfill Material Classes

A. Class I - Angular, 6 to 40 millimeters (1/4 to 1-1/2 inches) unwashed, graded stone such as crushed stone. Slag may be used with non-metallic pipes (HDPE, PP, or PVC). A No. 8 gravel possessing a minimum 50 percent mechanical crush count, and meeting the following nominal sizes and percentage passing will be considered an equivalent Class I material:

1. 100 percent passing 1-inch sieve
2. 75-95 percent passing 3/4-inch sieve
3. 40-70 percent passing 1/2-inch sieve
4. 0-15 percent passing No. 4 sieve

B. Class II (Granular Backfill) - Coarse sands and gravel-sand mixtures with a maximum particle size of 40 millimeters (1-1/2 inches), including variously graded sands and gravels containing small percentages of fines, generally granular and non-cohesive, either wet or dry. Soil types GW, GP, SW and SP are included in this class. Class II material shall comply with Classification for Structure Backfill as defined in INDOT Standard Specification Section 904.

C. Excavated Material - Excavated material suitable for use as trench backfill as specified must be clean and free of: rocks and other debris larger than 4 inches, frozen soil lumps, wood, or other extraneous material.

D. Flowable Fill - As described in Section 02130 – Flowable Backfill

2.02 Sheeting and Bracing

A. Sheeting and Bracing, where required, shall be capable of sustaining the lateral forces of the trench banks. Comply with all applicable Occupational Safety and Health Act (OSHA) requirements.

PART 3 - EXECUTION

3.01 Bedding and Backfill Locations

A. Refer to standard details for an illustration of the placement of bedding and backfill materials required for each pipe material class.

3.02 Site Preparation

A. Before any excavation is started, provide adequate protection for all lawns, trees, landscape work, shrubs, fences, hydrants, sidewalks, utility poles, and other objects that are to remain in place. Maintain such protection for as long as necessary to prevent damage from the Contractor operations.

B. Movable items such as mail boxes and roadway signs may be temporarily relocated during construction. Place movable items in their original location immediately after backfilling is complete. Replace movable items damaged during construction with new items at the Contractor's expense.

C. Strip topsoil and vegetation from the excavated areas. Clean topsoil may be stockpiled for reuse as the upper 6-inches of fill. Do not mix grass, weeds, roots, brush, and stones larger than 1-inch in diameter with stockpiled topsoil. Dispose of root contaminated topsoil.

D. Clear and remove logs, stumps, brush, vegetation, rubbish and other perishable matter from the job site as required for construction.

E. Remove existing pavement and walks from the excavated areas. The width of pavement to be removed shall not exceed the width of the trench by more than 12 inches on each side of the trench.

3.03 Material Disposal

A. All existing utility infrastructure and appurtenances (piping, structures, etc.) that are to be replaced or removed to allow for new construction are the responsibility of the Contractor unless otherwise designated. As these appurtenances are removed during the excavation, remove them from the job site and dispose of them in accordance with applicable local, state and federal rules and regulations.

3.04 Existing Facilities

A. Determine the exact location of and the means of protection for existing utility facilities and structures. Support and maintain operation of these facilities during construction.

B. Proceed with caution in the excavation and preparation of trenches so that the exact location of underground utilities and structures, both known and unknown may be determined. The Contractor shall be responsible for the repair of existing utilities and structures when broken or otherwise damaged by operations. Immediately bring to the attention of the Town any unforeseen conflicts with existing utilities encountered during excavation and preparation of trenches. If it is determined that the proposed utility cannot be installed at locations as shown, make adjustments in its alignment or relocation of the existing utilities as approved by the Town.

3.05 Excavating

A. Store excavated materials suitable and necessary for backfilling in a neat pile adjacent to the excavation in a manner so as to interfere as little as possible with traffic. Do not place such materials with sufficient height or proximity to excavation so as to endanger such openings due to earth slides or cave-ins. Do not stockpile excavated material closer than 2 feet from the top edge of the trench wall at ground surface.

B. Remove excavated material not suitable for backfilling and excess suitable material from the job site and dispose of in a spoil area secured by the Contractor in accordance with all local, state, and federal regulations.

C. Provide and maintain adequate dewatering equipment to remove and dispose of surface and ground water entering excavations. Use diversion ditches, dikes or other suitable means to prevent surface water from entering the excavation and to provide adequate drainage of the area adjacent to the excavation. Filter the water from dewatering operations to remove sediment before discharge.

3.06 Trenching

A. Excavate trenches to a depth and width as required for the proper installation of the pipe and appurtenances. Fill excavations below the required grade with compacted bedding material.

B. Make trenches as narrow as possible. Keep sides of trenches as near vertical as possible and properly sheet and/or brace, if required. Perform open cut excavation except where noted otherwise. Provide a clearance of not less than 8 inches or more than 12 inches on each side of the pipe for the width of the trench.

C. Provide a continuous, uniform bearing support for the pipe on solid undisturbed soil or compacted granular backfill within trench dished to provide circumferential support to the lower third of each pipe. Dig out holes to receive pipe bells.

D. Remove rock and soft material encountered in the trench which, in the opinion of the Town is incapable of providing adequate bearing to support the pipe, to a depth of 4 inches below the required elevation and fill with compacted granular backfill material. Field measure these locations where additional granular backfill is required, prior to backfilling.

E. Do not open more than 50 feet of trench in advance of the installed pipe, unless otherwise directed or permitted by the Town. Excavate the trench within 6 inches of full depth for a distance of at least 30 feet in advance of the pipe installation, unless otherwise directed or permitted.

F. Maintain one lane of traffic at all streets and service drives during construction. Streets and drives may be closed and traffic detoured if prior permission is obtained by the Contractor from the State, Town, County or Local Business having jurisdiction.

G. Support all sewer, gas, water or other pipes or conduits crossing the trench without damage and without interrupting service. The manner of supporting such pipes or conduits will be subject to the approval of the Town and Utility involved.

H. Provide adequate sheeting and bracing in open cut trenches to protect life, property and the work.

I. Place, renew, and maintain all sheeting, planking, timbering, shoring, bracing, and bridging, and do not remove until sufficient backfill has been placed to protect the pipe. Sheeting, shoring and/or bracing is not a pay item unless the Contractor is directed by the Town to leave same in place. Be accountable and responsible for all sheeting and bracing used, and for damages to persons or property resulting from the improper quality, strength, placing, maintenance and removal of the sheeting and bracing, including damage to trees, shrubs, walkways and other similar property during the trenching, backfilling and pipe laying operations. Ensure all sheeting and bracing complies with applicable OSHA regulations.

J. Where rock is encountered during trenching operations, Contractor may remove the rock by mechanical means. The use of a rock trencher which produces excavated material commensurate to "granular backfill" is preferred. Materials suitable for granular backfill excavated by a rock trencher may be used as bedding for pipe in areas of rock excavation. Blasting is not permitted.

K. Where water mains are to be installed under existing asphalt or concrete driveways, roads, or streets, install the main by boring a hole and inserting the main in the bore hole.

L. Do not cut fences when gates are available within a reasonable distance to move equipment from one field to another. Comply with applicable easements or obtain property access permission prior to accessing or traversing fields.

3.07 Bedding

A. Rigid Pipe for Pressure Pipe Applications

1. For rigid pressure pipe installed outside the pavement loading zone, provide with lightly consolidated excavated material for bedding placed from the bottom of the trench to the springline of the pipe (1/2 the outside pipe diameter). Refer to Article 3.08 for backfill requirements.
2. For rigid pressure pipe installed within the pavement loading zone, provide with Class I material for bedding and initial backfill from 4 to 8 inches (based on pipe diameter) below the pipe barrel to the springline of the pipe (1/2 the outside pipe diameter). Refer to Article 3.08 for backfill requirements.
3. Shovel slice or otherwise carefully place and “walk” or hand tamp Class I granular material into place. Place bedding and initial backfill in 6 to 8-inch balanced lifts to ensure proper compaction and filling of all voids.

B. Rigid Pipe for Gravity Pipe Applications

1. For rigid gravity pipe installed outside and within the pavement loading zone, provide with Class I or Class II granular material for bedding and initial backfill from 4 to 8 inches (based upon pipe diameter) below the pipe barrel to the springline of the pipe (1/2 the outside pipe diameter). Refer to Article 3.08 for backfill requirements.
2. Shovel slice or otherwise carefully place and “walk” or hand tamp Class I granular material into place. Compact Class II granular material to 95 percent of Standard Proctor dry density in accordance with ASTM D698. Place bedding and initial backfill in 6 to 8-inch balanced lifts to ensure proper compaction and filling of all voids.

C. Flexible Pipe for Pressure Pipe Applications

1. For flexible pressure pipe installed outside and within the pavement loading zone, provide with Class I granular material for bedding and initial backfill, shovel sliced or otherwise carefully placed and "walked" or hand tamped into place from 4 to 8 inches (based upon pipe diameter) below the pipe barrel, to a minimum of 6 inches above the crown of the pipe. Refer to Article 3.08 for backfill requirements.
2. Place bedding and initial backfill in 6 to 8-inch balanced lifts to ensure proper compaction and filling of all voids.

D. Flexible Pipe for Gravity Pipe Applications

1. For flexible gravity pipe installed outside and within the pavement loading zone, provide with Class I granular material for bedding and initial backfill, shovel sliced or otherwise carefully placed and "walked" or hand tamped into place from 4 to 8 inches (based upon pipe diameter) below the pipe barrel to a minimum of 12 inches above the crown of the pipe. Refer to Article 3.08 for backfill requirements.
2. Place bedding and initial backfill in 6 to 8-inch balanced lifts to ensure proper compaction and filling of all voids.

E. Reinforced Concrete Box (RCB) Sections

1. For RCB sections, provide with Class I granular material for bedding, "walked" or hand tamped into place to a minimum depth of 6 inches.

3.08 Trench Backfilling

A. Do not backfill trenches until all piping and utilities have been inspected and until the piping system, as installed, conforms to the requirements as shown on the Construction Standards and are approved by the Town.

B. Backfill all trenches within State Highway Right-of-Way in accordance with Indiana Department of Transportation Specifications. Backfill all trenches within the right-of-way of other public authorities having jurisdiction in accordance with requirements of said public authority.

C. Backfill

1. When located within the pavement loading zone, a minimum of 18 inches of backfill is required between the top of pipe and bottom of pavement section. Refer to the applicable specification sections for minimum cover requirements for the type of pipe. Use Class II granular material compacted to 95 percent of Standard Proctor dry density in accordance with ASTM D698. Place fill in 6 to 8-inch maximum balanced lifts and compact each layer to 95 percent of Standard Proctor dry density in accordance with ASTM D698 or flowable fill in accordance with Section 02130 – Flowable Backfill. Where existing pavement will be replaced as part of this project, place the final 12 inches of fill below the pavement in 6-inch maximum balanced lifts and compact each lift to 100 percent Standard Proctor dry density in accordance with ASTM D698. When subgrade treatment for new pavement will be provided as part of this project, coordinate with the Town regarding the top limit of granular backfill required.
2. When located outside of the pavement loading zone, compact all backfill to a minimum of 80 percent of the Standard Proctor dry density in accordance with ASTM D698. Additional compaction efforts may be required to minimize settling. Excavated materials are suitable for backfilling outside the pavement loading zone. Place backfill in maximum 12-inch balanced lifts unless specified otherwise below. Make proper allowances for topsoil as applicable. Limited mounding of backfill above finish grade may be performed to compensate for settlement. Place 6 inches of topsoil over the area to be seeded.
3. Backfill trenches at unpaved driveways and alleys with Class II granular material up to the last 12 inches, then replace the last 12 inches with the same material as the original surface. Place backfill in 8-inch balanced lifts and compact to 95 percent Standard Proctor dry density in accordance with ASTM D698.

D. Compact backfill by using hand tamping or approved mechanical tamping device. Prepare upper portion of trench for pavement replacement as applicable.

E. Maintain backfilled trenches in a smooth and uniform condition until paving or seeding operations are completed. Refill and restore to the original grade any settlement in the backfill which takes place within the warranty period at no additional cost.

3.09 Field Quality Control

A. Compaction Testing

1. Perform compaction tests at all road crossings in accordance with the INDOT Standard Specifications.
2. Notify the Town 24 hours prior to the tests.

PART 4 - FIGURES

4.01 Associated Standard Details

Detail No.	Description
OT-01	Rigid Pressure Pipe Trench
OT-02	Rigid Gravity Pipe Trench
OT-03	Flexible Pressure Pipe Trench
OT-04	Flexible Gravity Pipe Trench

END OFSECTION 02220

SECTION 02224 – TRENCHLESS EXCAVATION – HORIZONTAL BORINGS

PART 1 - GENERAL

1.01 Summary

A. Section Includes: Furnishing and installing casing pipes beneath waterways, highways, railroads, and other locations as shown on the Drawings and performing all related work necessary to complete work shown and specified.

B. Products Installed but not Supplied Under this Section

1. Carrier pipe

C. Related Sections

1. Section 02200 - Earthwork
2. Section 02220 - Trenching, Backfilling and Compaction for Utilities
3. Section 02226 - Trenchless Excavation - Directional Drilling
4. Section 02660 - Water Mains
5. Section 02720 - Storm Sewer Systems
6. Section 02730 - Gravity Sanitary Sewer Systems
7. Section 02737 - Force Main Sewer Systems

1.02 References

A. American Society for Testing and Materials (ASTM), latest editions

1. ASTM A139 - Standard Specification for Electric-Fusion (Arc)-Welded Steel Pipe (NPS 4 and Over)

1.03 Submittals

A. Quality Control Submittals: Before beginning any work, submit the following items to the Town. Do not proceed with the work until such documents have been reviewed by the Town. The review by the Town of any plan or method shall not relieve the Contractor of his responsibility in any way.

1. Manufacturer's Certificate of Compliance certifying compliance with the referenced specifications and standards
2. Certified copies of reports of factory tests specified in this Section and required by the referenced standards
3. Plans and details describing materials and methods proposed by the Contractor
4. Documentation of experience as required by Article 1.04A

1.04 Quality Assurance

A. Qualifications

1. Demonstrate experience and expertise in trenchless excavation methods by providing a list of 6 references for whom similar work has been performed. Include a name and telephone number for each contact.
2. Provide documentation showing successful completion of at least 10,000 linear feet of horizontal bore installation of piping, or obtain the services of an experienced subcontractor to supervise the installation. Conventional trenching is not considered as applicable experience.
3. Adequately train all supervisory personnel and ensure they have at least 4 years of experience in this trenchless installation method. Submit the names and resumes of all supervisory field personnel for review by the Town.

B. Regulatory Requirements

1. Perform all horizontal boring work in accordance with laws, permits, requirements and regulations of the authority having jurisdiction.

C. General Procedures

1. Attend all meetings and provide all necessary data, reports, information, details, and construction schedules as requested by the governing officials.
2. Notify the Town when each individual boring and receiving pit has been staked in the field. Provide a survey crew to obtain profiles along the length of each individual boring location. Do not proceed with the work until the survey information is obtained for the respective boring location and is approved by the Town.
3. The Town or proper officials will review and modify as necessary the scheduling of any and all construction activities for the crossing in order to prevent interruption to traffic and stream flow. No additional compensation will be made on account of such procedures.
4. Notify the proper officials before beginning the installation of casing pipe on each individual boring.
5. Complete all work in a careful, workmanlike manner to the satisfaction of the proper officials, as well as the Town.

PART 2 - PRODUCTS

2.01 Steel Casing

A. Provide casing pipe and joints of steel construction. Provide casing pipe and joints capable of withstanding the load of traffic or the load of pavement, subgrade, and traffic, as applicable. Assemble the casing pipe and joints to prevent leakage of any matter from the casing or carrier pipe throughout its entire length including the ends of the casing pipe.

B. Use welded steel casing pipe, new and unused material in accordance with current ASTM A139 Grade B for “Electric Fusion of Welded Steel Pipe” with a minimum yield of 35,000 psi. The inside diameter shall be at least 6 inches greater than the largest bell diameter of the carrier pipe’s main joint.

C. The minimum wall thickness of the casing pipe shall be as shown in the following table:

Diameter of Casing	Minimum Wall Thickness (Inches)	
	Under Roadway or Waterway	Under Railroad
Under 14"	0.250	0.188
14"	0.250	0.219
16"	0.250	0.219
18"	0.250	0.250
20"	0.375	0.281
22"	0.375	0.312
24"	0.375	0.344
26"	0.375	0.375
28"	0.500	0.406
30"	0.500	0.406
32"	0.500	0.438
34"	0.500	0.469
36"	0.500	0.469
38"	0.500	0.500
40"	0.500	0.500
42"	0.500	0.500

D. Coat the exterior walls of casing with protective coal tar or bitumastic material, after the welding of each joint has been completed.

E. When casing is installed without benefit of a protective coating and the casing is not cathodically protected, increase the wall thickness shown above to the nearest standard size, which is a minimum of 0.063 inch greater than the thickness shown.

F. Mark the diameter, gauge, ASTM specification and manufacturer's name on the exterior of each pipe length.

2.02 Casing Spacers

A. Provide casing pipe spacers with stainless steel bands and risers, plastic liner and runners as manufactured by Cascade Waterworks Manufacturing Company or approved equal.

PART 3 - EXECUTION

3.01 Installation of Casing Pipe

A. Install casing pipe as shown and specified, in accordance with approved jacking and boring methods. Maintain the lines and grades, as shown, for the entire length of the casing.

B. Proceed with installing the casing operation from a pit, excavated at a minimum of 30 feet from the edge of pavement or top of bank, as applicable. Construct bore pit without interruption to traffic or stream flow. Contact the applicable authority before entering property to do work.

C. Sheet excavation pits as necessary, in accordance with all applicable Occupational Safety and Health Act (OSHA) requirements. Ensure excavation and backfill is as specified in Section 02220 - Trenching, Backfilling, and Compaction for Utilities.

D. Set casing under railroads as shown on Drawings with top not less than 5-1/2 feet below base of the rails. Make casing a minimum of 99 feet long, centered under the track and measured at normal angle to centerline of track.

E. Measure and locate each end of the casing pipe to a minimum of 2 permanent reference points for Record Drawing purposes.

3.02 Construction of Casing Pipe by Methods Other Than Jacking or Boring

A. If the casing pipe is installed by methods other than the jacking method, perform it in a manner which meets with prior approval of the authorities.

B. Be responsible for any expense incurred in connection with the construction of the crossing, removal, replacement, or maintenance resulting from the construction of the casing pipe and the carrier pipe.

3.03 Installation of Carrier Pipe

A. The carrier pipe designated on the Drawings shall be as specified in other Sections for the type of pipe, whether water main, gravity sanitary sewer, storm sewer, force main, or other utility conduit.

B. Jointing of the carrier pipe is as specified in other Sections for the type of utility, pipe material, and joint fittings.

C. Place the carrier pipe into and through the steel casing at locations shown on Drawings. Employ suitable methods to maintain tight joints, to the satisfaction of the Town.

D. Install casing pipe spacers to provide uniform support throughout the entire length of the casing.

E. Block up ends of casing pipe in such a way as to prevent the entrance of foreign material, but do not tightly seal. Grouting of the void space between the casing and the carrier pipe is not required.

PART 4 - FIGURES

4.01 Associated Standard Details

Detail No.	Description
TL-01	Casing Pipe
TL-02	Casing Spacer
TL-03	Pressure Pipe Crossing Waterway
TL-04	Pressure Pipe Crossing Roadway/Railroad
TL-05	Gravity Pipe Crossing Waterway
TL-06	Gravity Pipe Crossing Roadway/Railroad

END OF SECTION 02224

SECTION 02226 - TRENCHLESS EXCAVATION - DIRECTIONAL DRILLING

PART 1 - GENERAL

1.01 Summary

A. Section Includes: Installation of water mains, storm sewers, sanitary sewers, and force mains by the directional drilling method and performing all related work necessary to complete work shown and specified.

B. Related Sections

1. Section 02220 - Trenching, Backfilling and Compaction for Utilities
2. Section 02660 - Water Mains
3. Section 02720 - Storm Sewer Systems
4. Section 02730 - Sanitary Sewer Systems
5. Section 02737 - Force Main Sewer Systems

1.02 References

A. American Society for Testing and Materials (ASTM), latest editions

1. ASTM D1248 – Standard Specification for Polyethylene Plastics Extrusion Materials for Wire and Cable

1.03 Submittals

A. Quality Control Submittals: Before beginning any work, submit the following items to the Town. Do not proceed with the work until such documents have been reviewed by the Town. The review by the Town of any plan or method shall not relieve the Contractor of his responsibility in any way

1. Manufacturer's Certificate of Compliance certifying compliance with the referenced specifications and standards
2. Certified copies of reports of factory tests specified in this Section and required by the referenced standards
3. Details of equipment and written procedure with working drawings describing in detail the proposed directional drilling method and the entire operation to be used
4. Documentation of experience as required by Article 1.04A

1.04 Quality Assurance

A. Qualifications

1. Demonstrate experience and expertise in trenchless excavation methods by providing a list of 6 references for whom similar work has been performed. Include a name and telephone number for each contact.
2. Provide documentation showing successful completion of at least 50,000 linear feet of directional drilling, or obtain the services of an

experienced directional drilling subcontractor meeting the experience requirements of this section to supervise the installation. Conventional trenching is not considered as applicable experience.

3. Adequately train all supervisory personnel and ensure they have at least 4 years of experience in directional drilling installation method. Submit the names and resumes of all supervisory field personnel for review by the Town.

B. Regulatory Requirements

1. Perform all directional drilling work in accordance with laws, permits, requirements and regulations of the authority having jurisdiction.

C. General Procedures

1. Attend all meetings and provide all necessary data, reports, information, details and construction schedules as requested by the governing officials.
2. Complete all work in a careful, workmanlike manner to the satisfaction of the proper officials, as well as the Town.

PART 2 - PRODUCTS

2.01 Pipe

A. Water main pipe shall meet the requirements as specified in Section 02660 - Water Mains.

B. Storm sewer pipe shall meet the requirements as specified in Section 02720 – Storm Sewer Systems.

C. Sanitary sewer pipe shall meet the requirements as specified in Section 02730– Sanitary Sewer Systems.

D. Force main pipe shall meet the requirements as specified in Section 02737 – Force Main Sewer Systems.

PART 3 - EXECUTION

3.01 Examination

A. Verify the location of all known and unknown utilities and structures by test pitting prior to any boring or drilling. These utilities and structures may include, but are not limited to:

1. Underground utilities such as, but not limited to:
   a. Cable television lines
   b. Electric cables
   c. Fiber optic lines
   d. Field drain tiles
   e. Gas lines

f. Sewer lines and septic systems
g. Storm lines
h. Telephone lines
i. Water mains
j. Wells

2. Above-ground utilities and other obstructions such as, but not limited to:
   a. Buildings
   b. Electric and telephone poles
   c. Road signs
   d. Trees

B. The Contractor is responsible for inspecting the site, for conducting investigations, surveys and tests, including subsurface investigations and tests that are necessary for the complete execution of all the work.

3.02 Installation

A. General

1. Notify the Town 48 hours in advance of starting directional drilling work. Do not begin the directional drilling until the Town, or his authorized representative, is present at the job site and agrees that proper preparations for the operation have been made. The Town's approval for beginning the installation shall in no way relieve the Contractor of the ultimate responsibility for the satisfactory completion of the work.
2. Open cut disturbance of waterway, roadway, or railroad to retrieve any lost boring appurtenances or equipment is prohibited.
3. Maintain a log of drilling operations which includes vertical depths of the pipe at established horizontal intervals every 25 feet.

B. Equipment

1. The directional drilling system to be used must have the following features:
   a. The system shall be remotely steerable and permit electronic monitoring of tunnel depth and location. The system shall be able to control the depth and direction of the pipe and must be accurate to a window of ±2 inches.
   b. The system shall utilize a fluid-cutting process, using a liquid clay such as bentonite. This clay shall be totally inert and contain no risk to the environment.
   c. The liquid clay shall remain in the tunnel to increase the stability of the tunnel and to provide a lubricant to reduce frictional drag when the pipe is installed.
   d. Recover spoils by use of a vacuum system mounted on a vehicle for removal of the spoils. Do not discharge spoils into waterways, water bodies, sewers or storm drains. Properly dispose of all spoil material.
   e. Equipment shall be fitted with a permanent alarm system capable of detecting an electrical current. The system will have an audible alarm to warn the operator when the drill head nears electrified cables within a

safe operating distance. Refer to paragraph 3.02B for additional safety requirements.

C. Safety

1. Mechanical, pneumatic or water-jetting methods are not acceptable due to the risk of surface subsidence and damage.
2. Upon completion of drilling and pipe installation, remove all spoils from all starting and termination pits. Restore pits to their original condition.
3. Where manholes or grinder pumps are to be installed, use adequate protection in the form of steel plates in traffic areas and timber shutters in other areas until such times as the manhole or grinder pump is installed and the pit is backfilled and stabilized. The Contractor shall be responsible for maintaining these areas.
4. Because directional drilling may be performed while existing buried electrical cable is energized; meet the following safety requirements:
   a. Include a permanent, inherent alarm system capable of detecting an electrical current on all drilling equipment. Equip the ground system with an audible alarm to warn the operator when the drill head nears electrified cable within a safe operating distance.
   b. Provide all crews with grounded safety mats, heavy gauge ground cables with connectors, hot boots and gloves.
   c. Adequately train all supervisor personnel having direct supervisory experience in directional drilling.

D. Drilling Procedure

1. Grade or fill the work site to provide a level working area. Make no alterations beyond what is required for operations. Confine all activities to the designated work areas and construction limits.
2. Accurately survey the entire drill path and place entry and exit stakes in the appropriate locations within the areas indicated on the drawings. If the Contractor is using a magnetic guidance system, survey the drill path for any surface geo-magnetic variations or anomalies.
3. Place erosion and sediment control for perimeter protection necessary to contain any hydraulic or drilling fluid spills, including berms, liners, turbidity curtains and other erosion control measures. Adhere to all applicable environmental regulations. Do not store fuel and oil in bulk containers within 200 feet of any water-body or wetland.
4. Place pipe resting on paved or hardened surfaces (i.e., sidewalks, asphalt, concrete, gravel, etc.) on pipe rollers before being pulled into the drill hole with rollers spaced close enough to prevent excessive sagging and dragging of the pipe upon rough surfaces which could scar the pipe.
5. Calibrate the directional drilling head locator at the start of the day and at each new directional drilling operation. Keep a daily calibration log for the Town's review.
6. Ensure the directional drilling operator has full control of the direction of the drilling tool at all times. Abandon and fill shallow, misdirected or other unsuccessful drills at the direction of the Town and at own expense.

7. The maximum drill angle shall be 15 degrees measured perpendicular to grade to the design depth elevation.
8. Drill a pilot hole on the drill path with no deviations greater than 5 percent of depth over a length of 100 feet. In the event that the pilot hole does deviate from the drill path more than 5 percent of depth in 100 feet, notify the Town and the Town may require pull back and re-drill from the location along the drill path before the deviation.
9. In the event of a drilling fluid fracture, inadvertent returns or returns loss occurs during pilot hole drilling operations, cease drilling, wait at least 30 minutes, inject a quantity of drilling fluid with a viscosity exceeding 120 seconds as measured by a Marsh funnel and then wait another 30 minutes. If mud fracture or returns loss continues, cease operations and notify the Town. The Town and Contractor will discuss additional options and work will then proceed accordingly.
10. Upon successful completion of the pilot hole, ream the drill hole to a minimum of 25 percent greater than the outside diameter of the pipe using the appropriate tools. Do not attempt to ream at one time more than the drilling equipment and mud system are designed to safely handle.
11. After successfully reaming the drill hole to the required diameter, pull the pipe through the drill hole. In front of the pipe will be a swiveling mandrel. Once pull-back operations have commenced, operations must continue without interruption until the pipe is completely pulled into the drill hole. Do not apply more than the maximum safe pipe pull pressure at any time during pull-back operations.
12. Pull back tracer wire with the pipe as specified in the applicable specification for the type of pipe.
13. In the event the pipe becomes stuck during pull-back, cease pulling operations to allow any potential hydro-lock to subside and then commence pulling operations. If the pipe remains stuck, notify the Town. The Town and the Contractor will discuss options and then work will proceed accordingly.
14. At all drill pits and directional drilling entrances and exits to the surface, use a backhoe or equivalent to gradually return the bore depth to the prescribed depth.
15. Backfill and compact all drill pits and directional drilling entrances and exits to the surface as specified in Section 02220 - Trenching, Backfilling and Compaction for Utilities.

3.03 Field Quality Control

A. Line and Grade

1. Maintain a daily calibration log of the directional drilling head locator. Provide completed forms or computer generated output to the Town on a daily basis for checking line and grade of the drilling operation.
2. Dig test/pressure relief holes (potholes) every 50 feet along the bore route to confirm alignment and grade, and to relieve subsurface pressure.
3. Allowable deviation in pressure pipe line shall be a maximum of 12 inches in any 100-foot section.

4. Allowable deviation in gravity pipe grade, as measured from the upstream manhole, shall be a maximum of 4 inches for the 100-foot length of gravity sewer. At no point in the gravity sewer shall the slope be less than 0.40%.
5. Perform a post CCTV inspection of all gravity pipes. A belly in the pipe that, in the opinion of the Town, exceeds 3 inches is not acceptable.
6. Replace sections of pipe that do not meet the above requirements at no additional cost to the Town. If the new installed pipe does not meet the above requirements, either grout and abandon the pipe in place, or remove the pipe and fill the void as directed by the Town at no additional cost to the Town.

B. Additional Testing

1. Perform all testing as required in other sections for the type of utility pipe installed.

PART 4 - FIGURES

4.01 Associated Standard Details

Detail No.	Description
TL-03	Pressure Pipe Crossing Waterway
TL-04	Pressure Pipe Crossing Roadway/Railroad
TL-05	Gravity Pipe Crossing Waterway
TL-06	Gravity Pipe Crossing Roadway/Railroad

END OF SECTION 02226

SECTION 02500 – PAVING AND SURFACING

PART 1 - GENERAL

1.01 Summary

A. Scope: This section covers all work involved in the installation of new pavement, sidewalks, and curbs, and the repair and replacement of existing streets, roads, highways, drives, parking areas, curbs, gutters, sidewalks, and other paved areas damaged or destroyed during construction.

B. Related Sections: Related Work Specified in the following Section

1. Section 02222 Earthwork for Utilities Subgrade Preparation

1.02 References

A. Codes, specifications, and standards referred to by number or title shall form a part of this specification to the extent required by the reference thereto. Except as specifically modified in this specification, paving and surfacing operations, materials and testing will comply with the most current revisions of applicable sections per the latest version of the Indiana Department of Transportation Standard Specifications.

1.03 Definitions

A. Abbreviations

1. INDOTSS Indiana Department of Transportation's Standard Specifications
2. AASHTO American Association of State Highway & Transportation Officials
3. ACI American Concrete Institute
4. ASTM American Society for Testing & Materials
5. NRMCA National Ready Mix Concrete Association

B. Rock: A natural aggregate of mineral particles connected by strong and permanent cohesive forces. Rock includes limestone, sandstone, dolomite, granite, marble, and lava.

C. Subgrade: The prepared and compacted soil immediately below the pavement or sidewalk system and extending to such depth as will affect the structural design.

D. Subbase: The layer of specified or selected material of designed thickness placed on a subgrade to support a base course and surface course.

E. Base Course: The layer of specified or selected material of designed thickness placed on a subbase to support a binder or surface course.

F. Binder Course: The layer of specified or selected material of designed thickness placed on a base course to support a surface course.

G. Surface Course: The layer of specified or selected material of designed thickness placed on a subbase or base course to support the traffic load.

1.04 Quality Assurance

A. The Developer/Contractor shall employ, at the request of the Town of Brownsburg or designee, and pay for the services of an independent testing laboratory (unless otherwise noted) to perform specific services and necessary field density tests. The Developer/Contractor shall demonstrate to the Town of Brownsburg or designee that proper compaction has been obtained and proper asphalt and concrete mix designs are in compliance with the specifications.

B. Mixing Plant: Prior to placing any hot asphalt concrete pavement or Portland cement concrete pavement, the Contractor shall provide the Town of Brownsburg or designee the name and location of the bituminous mixing or concrete mixing plant and the type and composition of mixes the Contractor proposes to use in the work.

C. Paving and surfacing shall comply with the tolerances specified in Sections 401.16 (Bituminous), 501.15, 501.16 and 501.23 of INDOTSS.

1. Subgrade and subbase shall be within 1/2 inch of dimensions indicated on drawings.
2. Bituminous base shall not vary longitudinally more than 1/4 inch from a 10-foot straightedge. Bituminous and concrete surfaces shall not vary more than 1/8 inch from a 10-foot straightedge.
3. Finished surface shall be within 1/4 inch of dimensions indicated on drawings.

D. Asphalt and concrete pavement shall be installed by a contractor whose prime business is asphalt or concrete paving.

1.05 Project Conditions

A. Do not place paving and surfacing materials on a wet surface, pumping subbase or when weather conditions would prevent the proper construction of paving and surfacing.

B. Do not place aggregates on frozen subgrade or subbase. Do not place aggregates when ambient air temperature is below 35°F.

C. Bituminous materials are to be placed in accordance with INDOTSS 402, 405.04, and 406.05.

D. When air temperatures are at or below 35 degrees F, an admixture is required to be added to the concrete to prevent freezing.

E. Do not place paving and surfacing materials when natural light is not sufficient to properly observe work or operations.

1.06 Grade Adjustments of Existing Structures

A. When grade adjustment of existing structures is required, the manhole frames, covers and gratings, and the gas and water valve boxes and covers, shall be removed and reconstructed to grade as required.

B. On resurfacing work, the castings and boxes shall be adjusted to grade after the last binder course has been laid and before placing the surface course.

C. All castings, frames and valve boxes adjusted to grade shall be done in advance of the final paving and shall be paid for by the Contractor as part of the project.

1.07 Contractor's Organization

A. The Contractor shall be a firm whose prime business is asphalt or concrete paving. The Contractor shall have a competent supervisor on the site during the progress of the work, acting for the Contractor in all matters concerning the work. He shall have the authority to receive directions and act upon them for the Town of Brownsburg or designee.

B. The Contractor shall keep a set of Plans and Specifications available on the site and in good condition.

1.08 Traffic Control

A. The Developer's Engineer shall plan construction operations so that existing local traffic access can be maintained. During the construction, The Contractor will also maintain appropriate use of barricades, lights, flagmen and other protective devices, whether specified for the project or required by the local governing authority. Traffic control devices used for maintenance of traffic shall comply with the latest version of the Indiana Manual on Uniform Traffic Control Devices.

PART 2 - PRODUCTS

2.01 Aggregate

A. Fine aggregates shall consist of natural sand or manufactured sand produced by crushing rock, shells, air-cooled blast furnace slag, or wet bottom boiler slag.

1. Fine aggregates used in Portland cement concrete and bituminous pavements shall be free from injurious amounts of organic impurities. When subjected to the colorimetric test for organic impurities and a color darker than the standard is produced, it shall be tested for effect of organic impurities on strength of mortar in accordance with AASHTO T 71. If the relative strength at 7 and 28 days, calculated in accordance with section 10 of T 71, is less than 95%, it shall be rejected.

B. Coarse aggregates shall consist of clean, tough, durable fragments of crushed rock, crushed or uncrushed gravel or shells, or crushed and processed air-cooled blast furnace slag. These materials shall not contain more than 15% flat or

elongated pieces and shall not contain particles with an adherent coating. Flat or elongated pieces will be described as pieces having a length in excess of four times its width.

C. Coarse aggregates shall comply with INDOTSS, Section 904.03. Fine aggregates shall comply with INDOTSS, Section 904.02.

2.02 Asphalt Materials

A. Petroleum asphalt cement shall be homogeneous, free from water, and shall not foam when heated to 347°F.

1. Petroleum asphalt cement shall be PG Binder, grade PG 64-22.
2. Petroleum asphalt emulsion shall be AE-60.

B. Asphalt materials for prime coat shall consist of:

1. Cut-back asphalt - MC-70; or
2. Asphalt emulsion - AE-P.
3. Materials shall conform to INDOTSS Sections 902.01 and 902.03.

C. Asphalt materials for tack coat shall consist of:

1. Asphalt emulsion - AE-T.
2. Materials shall conform to INDOTSS 902.01.

D. Asphalt materials for seal coat shall consist of

1. Asphalt emulsion - RS-2, AE-90, AE-150, HFRS-2.
2. Materials shall conform to INDOTSS Sections 902.01.

E. Cover aggregate shall consist of:

1. Coarse aggregates, Class A or B, size no. 8, 9, 11 or 12.
2. Fine aggregate (natural sand only), size no. 23 or 24.
3. Materials shall conform to INDOTSS Sections 904.01 and 904.03, respectively.

2.03 Hot Mix Asphalt (HMA)

A. Hot mix asphalt (HMA) shall consist of an intimate mixture of coarse aggregate, fine aggregate (including mineral filler if required), and asphalt cement or emulsion combined in proportions specified in INDOTSS Section 402.07.

B. When the use of one type or source of aggregate or binder is started, the use of that same type or source shall be continued for the entire lift being constructed, unless otherwise directed by the Town.

C. The use of recycled materials, RAP or ARS, shall not be permitted unless otherwise directed and approved by Town.

D. Preparation of HMA mixtures shall comply with the requirements of INDOTSS Section 402.07.

2.04 Portland Cement Concrete

A. Cement shall be Portland cement and shall meet the requirements of ASTM Specification C 150, ACI 301, and ACI 318. Cement shall be Type 1 for normal use, Type 1A where air entrainment is desired, or Type III or Type IIIA where high early strength is desired and authorized by the Town. Blended hydraulic cements which meet the requirements of ASTM Specification C 595 Type 1P Portland pozzolan cement may be used where a more watertight concrete is required. Fly ash may also be used as a partial cement replacement for Types 1 or 1A. Cement shall meet requirements specified in INDOTSS Section 901.

B. Regular fine and coarse aggregates shall meet the requirements of ASTM Specification C 33. Aggregate shall be crushed limestone with a maximum size of 3/4 inch, except in mass concrete the maximum size may be 11/2 inches.

1. Lightweight fine and coarse aggregates shall meet the requirements of ASTM Specification C 330.
2. Insulating fine and coarse aggregates shall meet the requirements of ASTM Specification C 332.

C. Water shall be potable, clean, and free from injurious amounts of oils, acids, alkalis, organic materials, or other substances that may be deleterious to concrete or steel. A maximum of 500 mg/L of chloride ion may be present in the water.

D. Air entraining admixtures shall meet the requirements of ASTM Specification C 260.

1. Water reducing and retarding admixtures shall meet the requirements of ASTM C494, Type A or Type D; however, they shall contain no chlorides, be nontoxic after 30 days and compatible with the air entraining admixtures. The amount of admixture added to the concrete shall be in accordance with the manufacturer's requirements. Furnish a compliance statement that the admixture used satisfies all requirements of this specification. Evidence that the admixture is included in the approved list of the INDOTSS Division of Materials and Tests, in accordance with INDOTSS Section 912.03, will satisfy the requirement for a compliance statement.
2. Fly ash shall meet the chemical and physical requirements of ASTM C 618 for mineral admixture Class F, except loss on ignition shall not exceed 6%. Fly ash shall be sampled and tested in accordance with ASTM C 311 prior to use.

E. Reinforcing steel shall meet the requirements of ASTM Specification A 615, Grade 60.

1. Welded wire fabric or wire mesh shall meet the requirements of ASTM A 185.
2. Reinforcing steel and appurtenances shall follow INDOTSS Section 910.01.

F. Preformed expansion joint filler shall meet the requirements of ASTM Specification D 1752, Type III.

1. Flexible foam expansion joint filler will not be allowed for general use in the Town of Brownsburg. Prior written approval must be obtained before this material can be used. If used without written approval from the Town of Brownsburg, the concrete shall be removed and replaced with expansion joint material approved by the Town.
2. Hot-poured elastic joint filler shall meet the requirements of ASTM Specification D 1190.
3. Waterproof expansion joint filler shall meet the requirements of ASTM Specification D 1850.
4. Joint materials specified in INDOTSS Section 906 may be used, approved by the Town.

G. Concrete pavement shall be wet cured by using burlap, waterproof blankets, or ponding; or by using a membrane compound. If the membrane method is used, the compound shall be Type 2, complying with AASHTO M148 for white pigmented compound. A pressure sprayer capable of applying a continuous uniform film to the pavement surfaces will be required.

H. Concrete for drives shall be within ¼ inch of the thickness specified, be reinforced with 6x6 - W2.9 / W2.9 welded wire fabric, and have tooled control joints at 12' maximum spacing. Tooled control joints shall be 1/8 inch wide and 1-1/8 inch deep.

I. Dowel bars shall be smooth, round bars of plain billet steel conforming to ASTM A615, Grade 40, and free of any deformation or foreign material that would restrict slippage in concrete. Dowel bars shall be coated as required by INDOTSS. For expansion joints, each bar shall be provided with a metal cap, or approved plastic cap, on one end that will provide for ample movement of the slabs.

1. Dowel bars and assemblies shall conform to the requirements of INDOTSS Section 503.04 (f).

J. Concrete base shall meet the requirements of INDOTSS Section 305.

K. Reinforced concrete pavement shall meet the requirements of INDOTSS Section 501.

L. Reinforced concrete for sidewalks and steps shall meet the requirements of INDOTSS Section 604.

M. Reinforced concrete for curbing shall meet the requirements of INDOTSS Section 605.

2.05 Underdrains

A. Refer to Section 02710 - Underdrain Systems.

PART 3 - EXECUTION

3.01 General

A. The Contractor is responsible to provide equipment, workmanship and materials required to achieve a finished product that meets these specifications.

B. Use compaction equipment suitable to the material being placed. Compacting equipment shall include at least one piece of equipment capable of providing a smooth even surface on the pavement surface course.

C. Prior to placing paving and surfacing materials, shape subgrade as required to produce finished pavement grades and cross-sections shown on drawings.

D. Do not place paving and surfacing material before subgrade is reviewed (proof roll) and accepted by the Town of Brownsburg or designee. Do not place paving and surfacing materials on a frozen or muddy subgrade.

E. Compact subgrade to not less than 100% of its maximum density as determined in accordance with AASHTO T99.

F. Provide adequate drainage at all times to prevent water from standing on subgrade, pavement or sidewalks

3.02 Subgrade

A. The subgrade material and testing shall comply with INDOTSS Section 207, before placement of subbase.

3.03 Subbase Preparation

A. Provide 8 inches of stone or crushed gravel subbase in locations where pavement is to be placed on a material other than Special Backfill. Subbase shall meet the requirements of INDOTSS Section 302. Pea gravel, or similar rounded aggregate is not an approved material for subbase or base material.

3.04 Aggregate Base, Surface or Shoulders

A. Aggregate base, surface, or shoulders shall consist of crushed rock or gravel. The aggregate type shall be suitable for the area in which the project is located. The aggregate thickness shall be as shown on the drawings and as specified herein.

B. Aggregate shall be Type “A” mix, unless otherwise specified by the Town of Brownsburg or designee.

C. Compacted aggregate materials and construction shall conform to INDOTSS Section 303.

D. If the required thickness of the aggregate (Type A) exceeds 4 inches, the material shall be placed and compacted in separate lifts no less than 2 inches nor more than 4 inches of compacted depth. If Type P aggregate is used, it may be placed in individual lifts with a thickness of up to 6 inches.

E. If spreading devices are used which will ensure proper depth and alignment, forms will not be required; otherwise, forms shall be required. Forms shall be of wood or steel, adequate in depth, straight, of uniform dimensions and equipped with positive means for holding the form ends rigidly together and in line. Segregation of material shall be avoided by any spreading method used. No payment will be made for aggregate placed beyond the dimensions shown on the drawings.

F. Compact material in each lift after material is spread and shaped. Compact material to not less than 100% of maximum dry density as determined by AASHTO T99. Use construction procedures, including sufficient wetting and number of passes, to ensure specified density is attained.

G. The Contractor shall employ an independent testing laboratory to perform field density tests to demonstrate proper compaction of aggregate.

H. In a brick surfaced street, unless specifically excepted and pending the structural adequacy of any remaining brick, the Contractor may remove all brick and enough base material to allow full width repaving using either a bituminous or concrete pavement. If providing a HMA base and HMA intermediate for the full depth of the brick across a trench, overlay the entire street with 1.5 inches of HMA surface over geotextile (Owens Corning TruPave Engineered Paving Mat or approved equal).

I. When placing HMA over existing concrete pavement, the existing pavement shall be stable and true to line and grade. This may require cracking and seating, removal of some sections to stabilize the subgrade, placement of a wedge and level course or other means and methods approved in writing by the Town of Brownsburg. After the existing pavement determined to be acceptable (with or without treatments) the entire street will receive a minimum of 1.5 inch HMA surface over geotextile (Owens Corning TruPave Engineered Paving Mat or approved equal).

J. Unless otherwise shown on the drawings, the minimum section (excluding subgrade) of reinforced concrete shall be 6 inches of compacted #53, Type “A” aggregate base and 6 inches of 4,000 psi reinforced concrete.

K. Unless otherwise shown on the drawings, for a street with a brick base and an asphalt surface, the replacement section shall be full depth asphalt from the bottom of the brick base to the top of the asphalt surface. The top 1.5 inches shall be 9.5mm HMA surface.

L. Unless otherwise shown on the drawings, for a street with a concrete base and an asphalt surface, the replacement section shall be a new concrete base, not less than 6 inches thick with 25.0mm HMA base to within 1.5 inches of the existing grade and then 1 inch of 9.5mm HMA surface.

M. Unless otherwise shown on the drawings, chip and seal pavements shall have 8 inches of compacted aggregate base (#53, Type "A" crushed stone) and 1 inch processed bituminous coated aggregate pavement placed and rolled.

N. Unless otherwise shown on the drawings, aggregate pavement shall be replaced with 6 inches of #53, Type "A" compacted stone.

3.05 Bituminous Milling

A. Milling shall produce the line and grade necessary to provide a uniform platform and required elevation for subsequent HMA courses. Prior to milling, areas for patching shall be marked and repaired to within 1.5 inches of the new surface elevation.

3.06 Hot Mix Asphalt

A. This work shall consist of constructing one or more courses of HMA base, intermediate, wedge leveling, and/or surface mixtures on a prepared foundation in accordance with these specifications and in reasonably close conformance with the lines, grades, thicknesses, and typical cross sections shown on the plans or established by the Town.

1. If the required finished depth of any course is to exceed three times the top size of the aggregate used as shown by actual screen analysis, the course shall be constructed in two or more lifts, as directed.
2. Mix type shall be as indicated on the drawings, without exception, unless otherwise approved in writing by the Town.
   a. Job mix formulas shall be prepared and submitted for approval in accordance with INDOTSS 402. The job mix formula shall include standard bituminous mixture information including, but not limited to, aggregate gradation, binder content, maximum specific gravity, and air voids.
3. Materials and construction requirements shall comply with the requirements of INDOTSS Section 402.

B. If the previously constructed course is granular, a prime coat may be required as a dust palliative.

1. Apply prime coat uniformly at a rate of 0.25 to 0.80 gallon per square yard depending on condition of surface and amount of loose aggregate.
2. Apply prime coat with a pressure distributor. Temperature of prime coat shall not exceed 150°F.
3. Squeegee excess prime coat from the subbase surface. Correct deficient or skipped area.

C. Place and spread bituminous base mixture with a bituminous paver. In areas inaccessible to a paving machine, place and spread bituminous base mixture by other acceptable mechanical or hand methods.

D. Tack coat shall be placed on ALL horizontal and vertical existing bituminous or concrete surfaces before a new lift of bituminous material is added. Apply tack coat uniformly at a rate of 0.06 gallon per square yard (0.000252 ton per square yard), resulting in a minimum of 90% coverage. If spray bar does not provide complete coverage, the tack coat operation shall be stopped until the equipment can produce the required coverage. If the equipment cannot produce the required coverage in a single pass, a second pass may be allowed or required, at the discretion of the Town of Brownsburg. The bituminous tack material shall be allowed to cure over approximately 90% of the surface area before paving operations can begin.

1. Patch and clean existing surface. The surface shall be free of irregularities and provide a reasonably smooth and uniform surface to receive the tack coat. Remove and replace unstable corrugated areas with suitable patching materials.
2. Tack coat shall be placed in accordance with INDOTSS Sections 406.03 through 406.05.

E. Placement and compaction of hot mix asphalt (HMA) shall conform to INDOTSS Sections 402.10 through 402.16.

F. Place bituminous mix used for wedging or leveling, approaches, and/or feathering by mechanical methods or acceptable hand methods for placing and spreading in accordance with INDOTSS Section 400.

G. HMA Surface shall be 9.5 mm surface mix unless approved in writing by the Town of Brownsburg.

H. HMA pavement that is subject to regular flooding or HMA pavement not covered by HMA surface for a period of six (6) months or longer, or if surface is not anticipated to be place prior to November 1 of the current year, shall be treated with a preservative sealer (Reclamite or approved equal), selected by the Town of Brownsburg, paid for by the Contractor.

3.07 Seal Coat and Covering Aggregate (Chip and Seal)

A. Application shall be as follows:

Seal Type	Cover Aggregate Size Number	Rate of Application per Square Yard: Aggregate Pounds	Rate of Application per Square Yard: Asphalt Material Gallons at 60°F
1-Single Application (only AE-90 or AE-150)	23, 24	12-15	0.12-0.16
2-Single Application	12	14-17	0.29-0.33

3-First Application	11	16-20	0.36-0.40
Second Application	12	16-19	0.33-0.37

B. Seal coat and covering aggregate shall be placed in accordance with INDOTSS Sections 404.04 through 404.08.

3.08 Portland Cement Concrete Pavement

A. Portland cement concrete pavement shall consist of a coarse aggregate base (if required) and a reinforced or unreinforced Portland cement concrete surface, as shown on the drawings.

1. Use No. 53, Type “A” coarse aggregate for subbase, unless otherwise shown or specified.
2. Pavement cross-section shall be as shown on drawings.

B. Where an aggregate base course is shown or specified, it shall be constructed in accordance with Article 3.04 of this specification.

C. Portland cement concrete pavement operations and materials shall comply with INDOTSS Section 501 unless otherwise specified by the Town.

1. Alternate equipment to that specified in INDOTSS, Section 501 shall be allowed provided that line, grade, surface, smoothness and other requirements of the specifications are met. The equipment used shall be subject to the approval of a Professional Engineer licensed in the State of Indiana.
2. Expansion and contraction joints shall be installed as indicated on the drawings or as required by INDOT standards. Expansion joints shall be required whenever new concrete abuts fixed objects or existing concrete surfaces, whether or not shown on the drawings.
3. Keyway construction, load transfer devices, tie bars and slab and ear reinforcement shall be installed as indicated on the drawings.
4. Unless otherwise shown on the drawings, the final finish of concrete pavement shall be by brooming, as set out as Method 1 in INDOTSS Section 504.03, to form a transverse skid-resistant finish.
5. The Contractor shall always have materials available to protect the surface of concrete against rain. These materials shall consist of burlap, curing paper or plastic sheeting.
6. New concrete pavement shall be protected by the Contractor until opening to traffic is approved by a Professional Engineer licensed in the State of Indiana. It shall not be opened to traffic until the field-cured concrete has attained a flexural strength of 550 psi, or a compressive strength of 3,500 psi. If such tests are not conducted, the pavement shall not be opened to traffic until 14 days after the concrete was placed. Before opening to traffic, the pavement shall be cleaned and permanent lane markings applied to the pavement.

3.09 Sidewalks

A. Sidewalks shall consist of a coarse aggregate base and a reinforced concrete pavement. Use No. 8 or No. 53 stone base, unless otherwise shown. Concrete shall be Class "A", 4,000 psi concrete.

B. Base shall be 2 inches thick, and concrete shall be 4 inches thick, unless crossing driveways, where the concrete will be the same thickness of the adjacent concrete drive, a thickness equivalent to the existing HMA drive, or 6 inches thick, whichever is greater. See detail TR-06.

C. Compact base to not less than 95% of maximum dry density, as determined in accordance with AASHTO T99.

D. Proportion, mix, and place concrete as specified in INDOT Sections 604 and 702. Sidewalks shall have a broom surface finish. Edge all outside edges of sidewalk and all joints with a 1/4inch radius edging tool.

E. Unless otherwise shown on the drawings, sidewalks shall be divided into sections not more than five feet in length by grooved joints formed by a jointing tool with a 1/4-inch radius.

F. Form construction joints around all abutting structures and appurtenances such as manhole, utility poles, hatches, and hydrants. Install 1/2inch thick pre-molded expansion joint filler in construction joints. Expansion joint material shall extend for the full depth of the sidewalk.

G. If existing sidewalk is to be removed and replaced with new sidewalk or new sidewalk extended from existing sidewalk, the existing sidewalk shall be saw-cut full depth and removed at the nearest joint of suitable quality or as directed by the Town of Brownsburg.

H. Ramps shall meet the requirements of INDOT standard drawings and Public Right-of-Way Accessibility Guidelines. See detail TR-07.

3.10 Curbs

A. The construction of curbs, combination curb and gutter, and integral curb and gutter shall be in accordance with these specifications and as shown on the plans and shall be in reasonably close conformance with the lines and grades shown on the plans or as directed by a Professional Engineer licensed in the State of Indiana.

B. Excavation for curbs shall be made to the required depth, and the subgrade or base upon which the curb is constructed shall be compacted to a firm, even surface to not less than 95% of maximum dry density as determined in accordance with AASHTO T99.

C. Concrete for curbs shall be Class A, 4,000 psi, as specified previously for Concrete Pavement.

D. The curbs shall be constructed by the use of wood or metal forms; or, if approved by a Professional Engineer licensed in the State of Indiana, the curb may be constructed using a curb slipform machine. Forms, if used, shall be straight, free from warped or bent sections, and shall extend for the entire depth of the curb and shall be securely held in place so that no deviation from alignment and grade will occur during placement of concrete. The concrete shall be consolidated by vibration or other acceptable methods. The top of the curb shall be floated smooth and the top outer corner rounded to a 1/4inch radius. See details TR-01 through TR-03.

E. The face, top, and gutter of curbs shall not have deviations or irregularities of more than 1/4inch when checked with a 10-foot straightedge. Curb inlets shall be placed ¼ inch lower than the adjacent gutter elevation. See detail TR-04.

F. Construction joints shall be placed at 10-foot intervals, unless otherwise shown or directed by a Professional Engineer licensed in the State of Indiana. The joint shall be uniform, of 1/8 to 1/4 inch in width, and to a depth of approximately 2-1/2 inches. The joint may be formed using concrete tools, saw cut or formed by approved removable strips providing a straight joint at right angles to the length of curb. Expansion joints shall be filled with specified bituminous joint filler material. Expansion joints shall be formed around all abutting structures such as inlets and shall be as specified previously.

G. As soon as possible after placing and finishing of concrete, the curbing shall be moistened and kept moist for three days, or cured with the use of a specified membrane compound.

H. If existing curb is to be removed and replaced with new curb or new curb extended from existing curb, the existing curb shall be saw-cut full depth and removed to the nearest joint.

I. During the placement of new concrete curb, utility marking shall be embossed into the top of the curb. The marking shall be a 2” high letter stamped into the concrete before the concrete sets up. The letters shall be located perpendicular from the utility feature that is being marked.

   1. The letters shall be as follows:
      G = Gas
      C = Conduit
      SS = Sewer Service Lateral
      MH = Manhole Behind Curb
      W = Water
      V = Water Valve
      SD = Subsurface Drain
      ST = Storm

J. Curb installed within 25 feet of a corner or stop sign shall be painted with standard yellow traffic paint and coated with Silica sand at the rate of 6.0 lb/gal. while the paint is still wet, in accordance with INDOTSS 808.06.

3.11 Lane Striping

A. Lane striping is to be in accordance with all applicable standards of INDOT specification section 808 and the construction plans.

B. Material for stop bars and crosswalks shall be 3M™ Stamark™ Pavement Marking Tape or approved equal.

C. Contractor will clean the new pavement surface to remove all dust, dirt, mud and debris prior to striping.

3.12 Testing for Hot Mix Asphalt (HMA)

A. At the discretion of the Town of Brownsburg, the Developer/Contractor shall employ and pay for the services of a competent independent testing laboratory to take cores at selected locations and perform described tests. Compaction requirements for HMA mixtures placed in accordance with INDOTSS Section 402 shall be controlled by in place density determined from cores cut from the compacted pavement. A minimum of two cores per section shall be cut for each course of each material or as directed by the Town of Brownsburg. Sections are defined as a maximum of 1041 tons of HMA base or intermediate or 624 Tons of HMA surface. The transverse core location shall be located so that the edge of the core will be no closer than 3 inches from a confined edge or 6 inches from a non-confined edge of the course being placed.

B. For compaction of HMA mixtures with quantities less than 104 tons per day, acceptance may be visual as determined by the Town.

C. The Contractor along with their independent testing lab representative shall obtain cores in the presence of the Town of Brownsburg with a device that shall produce a uniform 6 inches in diameter pavement sample. Each HMA course shall be cored within one workday of placement. Damaged core(s) shall be discarded and replaced with a core from a nearby location as selected by the Town.

D. The Contractor, in the presence of the Town of Brownsburg, shall mark the core to define the course to be tested. If the defined area is less than 1.5 times the maximum particle size, the core will be discarded and a core from a new random location will be selected for testing as determined by the Town. Within one work day of coring operations the Contractor shall clean, dry, refill and compact the core holes with suitable material approved by the Town.

E. The Contractor's testing lab representative shall take immediate possession of the cores. If the cores are subsequently damaged, additional coring within the specific section(s) will be required at locations to be determined by the Town of Brownsburg.

F. Each core shall be tested within one work day of coring operation to determine thickness, bulk specific gravity, aggregate gradation and binder content. Test results shall then be transmitted either verbally or by other means to both the

Contractor and the Town of Brownsburg for verification before each subsequent bituminous lift is placed.

1. Average thickness of the cores shall not vary from the plan thickness more than 0.5 inches for HMA base and intermediate course(s) and 0.25 inches for HMA surface course(s) for acceptance in accordance with INDOTSS section 105.03.
2. The bulk specific gravity shall be determined in accordance with AASHTO T166 or AASHTO T 275. The in place density of a section for a mixture shall be expressed as:

   Density % = (BSG/MSG) * 100

   Where:

   BSG = bulk specific gravity as determined from independent testing laboratory

   MSG = maximum specific gravity as reported on job mix formula.

3. The calculated density of the cores shall not be less than 90% nor more than 96% as set out above. Test results which are outside stated limits shall be considered and adjudicated as a failed material in accordance with INDOTSS Section 105.03.

G. The Contractor's independent testing laboratory representative shall determine the aggregate gradation and binder content of the core samples in accordance with ITM 571. Aggregate gradation shall be within tolerances set forth in INDOTSS Section 402.04 and binder content shall be within ±0.5 percent from the job mix formula. Test results which are outside the stated limits shall be considered and adjudicated as a failed material in accordance with INDOTSS Section 105.03.

H. A copy of all core test results shall be submitted to the Town for verification of specification compliance within one calendar week of core testing.

I. The Contractor shall make the following tests at their cost and they shall be as specified in this Article and requested by the Town. Perform tests in accordance with the following ASTM Specifications:

Test	ASTM Specification
Slump	C143
Air Content	C173
Test Cylinders	C31 or C513
Core Samples	C42
Fly Ash	C311

1. Measure slump each time test beams or cylinders are to be made and at any other time requested by the Town of Brownsburg. The slump shall be as specified in INDOTSS Section 501.03, or as otherwise specified herein, unless specifically excepted by the Town of Brownsburg.

2. Measure air content each time test beams or cylinders are to be made and at any other time requested by the Town of Brownsburg. The field test may be omitted if the air content is known prior to taking samples. The field test may not be omitted if fly ash is used in the mix.
3. Concrete paving mixes shall comply with guidelines of INDOTSS Section 501.04 and shall meet the testing requirements of Section 501.04 (a). However, in lieu of forming test beams as described in Section 501.04 (a) 2, the Contractor may substitute cylinder tests as follows:
   a. Make test cylinders in sets of four. Field cure one cylinder and break at seven days. Laboratory cure the remaining three cylinders and break at 28 days. The Contractor shall be responsible for handling and transportation of cylinders.
   b. If fly ash is used in the mix, a total set of seven cylinders shall be taken. The additional three cylinders shall be laboratory cured and broken at 56 days, if the 28-day strength does not meet specifications.
   c. Make one set of test cylinders for each 100 cubic yards, or fraction of 100 cubic yards, of concrete placed; or at other times requested by the Town of Brownsburg.
   d. Unless otherwise specified, concrete shall have a 28-day compressive strength of 4,000 psi, as demonstrated by laboratory tests of cylinders.

3.13 Protection

A. Maintain compacted aggregate base and surface true to line and grade and required density. Maintain base until pavement is placed. Maintain surface until job is complete.

B. Do not permit vehicular traffic of any kind on any bituminous course until the bituminous mixture has hardened sufficiently not to be distorted beyond specified tolerances. Remove any foreign material which is on the surface of any course before the course is rolled or any subsequent course is placed.

C. Do not permit traffic on concrete pavement or walks until concrete has developed sufficient strength not to be marked or damaged. Do not permit vehicular traffic on concrete for at least 14 days.

D. Repair or replace damaged pavement and walks to the satisfaction of the Town of Brownsburg or designee.

3.14 Cleanup

A. Clean up the job site following pavement and surfacing restoration. Remove all rubbish, excess materials, temporary structures, and equipment. Leave the work in a neat and presentable condition.

PART 4 - FIGURES

4.01 Associated Standard Details

Detail No.	Description
TR-01	Concrete Chair Back Curb & Gutter
TR-02	Concrete Roll Curb & Gutter
TR-03	Driveway Curb Cut
TR-04	Curb Inlet Detail
TR-06	Concrete Sidewalk Detail
TR-07	Sidewalk ADA Ramp Detail

END OF SECTION 02500

SECTION 02501 – STANDARDS OF ROADWAY GEOMETRIC DESIGN

PART 1 - GENERAL

1.01 Secondary Plats shall conform to the following requirements and standards:

A. Minimum Pavement Width

1. Minimum pavement widths, to be installed at the subdivider's expense, shall be as follows:
   a. Primary Arterials A1 and A2: Four (4) lanes at 12 feet, 4 feet center curb, plus 2 feet 7 inches curb and gutter.
   b. Primary Arterials B1 and B2: Two (2) lanes at 12 feet, 16 feet center turn lane plus 2 feet 7 inches curb and gutter.
   c. Primary Arterials C1 and C2: Four (4) lanes at 12 feet, 16 feet center turn lane plus 2 feet 7 inches curb and gutter.
   d. Secondary Arterial: Two (2) lanes at 12 feet, 16 feet center turn lane plus 2 feet 7 inches curb and gutter.
   e. Collector: Two (2) lanes at 12 feet, 12 feet center turn lane plus 2 feet 7 inches curb and gutter.
   f. Neighborhood Collector: Two (2) lanes at 12 feet plus 2 feet 7 inches curb and gutter.
   g. Local Roads with no parking: Two (2) lanes at 12 feet plus 2 feet 7 inches curb and gutter.
   h. Local Roads with parking on both sides: Two (2) lanes at 11 feet, 8 feet parking lane both sides plus 2 feet 7 inches curb and gutter.
   i. Local Roads with parking on one side: Two (2) lanes at 12 feet, 8 feet parking lane on one side plus 2 feet 7 inches curb and gutter.
   j. Multi-Use-Trail: 12 feet wide with 2 feet gravel shoulder on both sides.
2. Cul-de-sac design.
   a. A cul-de-sac should not exceed six hundred (600) feet in length, measured from the entrance to the center of the turnaround, and if more than one hundred fifty (150) feet in length, shall be provided with a turnaround having radius of not less than fifty-five (55) feet at the property line and not less than forty-five (45) feet at the curb line. The entire turnaround of the cul-de-sac shall be paved. For non-residential (commercial, business, and industrial) cul-de-sacs, the turnaround radius at the property line shall be increased to ninety-two (92) feet.
   b. There shall be no obstructions within the radius of a residential cul-de-sac unless specifically approved by the Plan Commission. Neither shall the radius of any non-residential cul-de-sac be obstructed, except for the placement of "no parking" signs which shall be required along all commercial and industrial streets within business parks, in accordance with the Municipal Code, as amended.
   c. Gang mailbox assemblies shall be installed, if directed by the Town of Brownsburg, along the tangent, proximate to the outbound lane for the cul-de-sac properties. The number of platted residential lots for a residential cul-de-sac or the number of commercial units for a commercial

cul-de-sac will dictate the number of mailboxes to be installed. See Standard Detail TR-17 and TR-18.

B. Street Grades, Curves, and Sight Distances

1. The minimum vertical grade for all streets shall be 0.5%.
2. Maximum Vertical Grades
   a. The maximum vertical grade for Primary Arterials 5.0% and Secondary Arterials shall be 7.0%.
   b. The maximum vertical grade for Collectors shall be 7.5%.
   c. The maximum vertical grade for Local Roads or Streets shall be 10%.
   d. The first 25 feet of an intersecting roadway, from the outer edge of a through roadway, shall be designed with a two percent (2%) downward grade. With a sag vertical curve situation, the two percent grade shall connect with the remaining street profile grade using a minimum vertical curve length of 50 feet. This sag vertical curve may start at the edge of the through roadway. With a crest vertical curve at the approach to an intersection, the two percent downward grade shall extend 25 feet from the edge of the through roadway and the crest vertical curve can begin at that point. The length of the crest vertical curve shall meet the requirements of the 1990 AASHTO Standards for crest vertical curves.
3. Vertical curves shall be designed to meet or exceed 1990 AASHTO Standards for sag and crest vertical curves as shown in Tables III-40 and III-42.
   a. Local Roads or Streets shall have a design speed of 30 mph.
   b. Collectors shall have a design speed of 30 mph.
   c. Primary Arterials and Secondary Arterials shall have a minimum design speed of 40 mph.
4. Horizontal centerline curve radius shall meet or exceed 1990 AASHTO Standards and shall correspond to the following design speeds:
   a. Subdivision Roads shall have a design speed of 30 mph and require a 150 foot minimum centerline radius. Any variances to this standard must be requested in writing and approved by the Town.
   b. Local Roads or Streets and Collectors shall have a design speed of 30 mph and require a 300 foot minimum centerline radius.
   c. Primary Arterials and Secondary Arterials shall have a design speed of 40 mph and require a 675 foot minimum centerline radius.
   d. Tangent distance between reverse curves shall be 100 feet.
5. The maximum length cul-de-sac length shall be 600 feet measured along the centerline from the intersection at the origin to the center of circle. Each cul-de-sac shall have a terminus of circular shape with minimum right-of way diameter of 110 feet for residential use and 184 feet for industrial use. Reference Figure P-12.

C. Intersections

1. Street curbs shall be rounded by radii of sufficient length to permit the smooth flow of traffic, but in no case shall curb radii be less than twenty (20) feet for local or cul-de-sac streets, or twenty-five (25) feet for collector streets, or forty

(40) feet for nonresidential streets. Minimum radii for arterials shall be as approved by the Administrator.

2. Street intersections shall be as nearly at right angles as is possible, and no intersection shall be at an angle of less than sixty degrees (60º).
3. Street intersections shall be designed to avoid the simultaneous intersection or more than two (2) streets carrying traffic from more than four (4) directions.
4. Street intersections shall not be closer than one hundred eighty five (185) feet from centerline to centerline.
5. Sight distance at intersections. The following paragraphs shall be required as a provision of the covenants of all secondary plats:
   a. No fence, wall, hedge, tree, shrub, planting or other similar item which obstructs sight lines at elevation between two and one-half (2½) and nine (9) feet above the crown of a street shall be permitted to remain on any corner lot within the triangular area formed by the street right-of-way lines and a line connecting points twenty-five (25) feet from the intersection of the street right-of way lines; or in the case of a rounded property corner, from the intersection of the street right-of-way lines extended.
   b. The same sight line limitations shall apply to any lot within ten (10) feet from the intersection of a street right-of-way line with the edge of a driveway pavement or alley line. For corner lots, no driveway shall be located within seventy (70) feet of the intersection of two (2) street centerlines.
6. At the intersection of any proposed Subdivision Road or Local Road or Street with a Primary Arterial, Secondary Arterial, or Collector, acceleration and deceleration lanes, passing blisters or left turn lanes shall be provided on the Primary Arterial, Secondary Arterial, or Collector. Reference Standard Details TR-15 and TR-16.

D. Easements

1. Where alleys are not provided, easements for utilities shall be provided. Such easements shall have minimum widths of 15 feet, and where located along lot lines, one-half the width shall be taken from each lot.
2. Where a subdivision is traversed by a watercourse, drainage ditch, channel, or stream, adequate areas for storm water or drainage easements shall be allocated for the purpose of widening, deepening, sloping, improving or protecting said watercourses in accordance with the requirements of the Hendricks County Drainage Board and/or the Town of Brownsburg.
3. The subdivider shall be encouraged to design for the placement of utility lines underground, following the required standards and specifications established by each utility company. The location of each underground utility system shall be shown by appropriate easement lines on the proposed plat.

E. Obstruction Free Zones

1. The obstruction free zone is defined as the roadside area next to the travelway which should be free from hazards and obstructions. Obstacles within the obstruction free zone limits should be removed, made breakaway, or shielded with guardrail. The obstruction free zone values given below are minimums and should be extended where accident experience indicates a

wider zone would further enhance safety. The following obstruction free zones apply to roadway projects:

2. Arterial Roads with Shoulders. Where the design speed is 50 mph or greater and the design ADT is over 1500, the minimum obstruction free zone is 20 ft from the edge of the through traffic lanes or to the right-of-way line, whichever is less. For roadways where the design speed is less than 50 mph, and the design ADT is less than 1500, the minimum obstruction free zone from the edge of through traffic lanes is 10 ft plus the usable shoulder width provided, or to the right-of-way line, whichever is less.
3. Collector Roads with Shoulders. Where the design speed is 50 mph or greater and the design ADT is over 1500, the minimum obstruction free zone from the edge of the through traffic lanes is 10 ft plus the usable shoulder width provided, or to the right-of-way line, whichever is less. For Roadways where the design speed is less than 50 mph and design ADT is less than 1500, the minimum obstruction free zone from the edge of through traffic lanes is 6.5 ft, plus the usable shoulder width provided, or to the right-of-way line, whichever is less.
4. Local Roads and Streets with Shoulders. The minimum obstruction free zone from the edge of the through traffic lane is 6.5 ft plus the usable shoulder width provided, or to the right-of-way line, whichever is less.
5. Curbed Roadways. Where curbs are 6 in. or higher and the posted speed limit is less than 50 mph, the minimum obstruction free zone from the face of the curb should be 1.5 ft. However, for traffic signal supports the minimum obstruction free zone should be 2.5 ft. Where the curbs are less than 6 in. in height or the posted speed limit is 50 mph or greater regardless of curb height, the minimum obstruction free zone will be the same as defined in Items 1, 2, or 3 above.
6. Appurtenance-Free Area. Roadways for all functional classifications should have a 1.5 ft appurtenance-free area from the face of curb or from the edge of the travel lane if there is no curb. For traffic signal supports, a 2.5 ft clearance should be provided. The appurtenance free area is defined as a space in which nothing, including breakaway safety appurtenances, should protrude above the paved or earth surface. The objective is to provide a clear area adjacent to the roadway in which nothing will interfere with extended side-mirrors on trucks, with the opening of vehicular doors, etc.
7. On-Street Parking. The following obstruction-free zone requirements will apply to facilities with on-street parking.
   a. Continuous 24-Hour Parking. No obstruction-free zone is required on facilities where there is continuous 24-hour parking, except that the appurtenance-free area as shown in INDOT Design Manual Figure 55-5A should be provided from the face of the curb or edge of the parking lane if there is no curb.
   b. Parking Lane Used as a Travel Lane. The obstruction free zone should be determined assuming the edge of the parking lane as the right edge of the farthest right travel lane.
8. Application
   a. The designer should eliminate or modify the following hazards, according to the above treatments, if they are within the obstruction free zone:
      1) Tree Removal. Trees that will mature to a diameter of 4 in. or more should be removed from the obstruction free zone, unless shielded by

a protective device required for other purposes. Trees on back slopes may generally remain if they are unlikely to be impacted by errant vehicles.

2) Obstructions. Obstructions within the obstruction free zone, such as rough rock cuts, boulders, headwalls, foundations, etc., with projections that extend more than 4 in. above the ground line should be removed, relocated, made breakaway or shielded with guardrail as appropriate. A rough rock cut is one that presents a potential vehicular snagging problem.
3) Sign and Light Supports. Sign posts and light poles to remain within the obstruction free zone will be made breakaway. In urban areas where pedestrian traffic is prevalent, breakaway light supports should not be used. However, these supports should, as a minimum, be offset beyond the obstruction free zone value as presented in Section 02501 – 1.01 – E or desirably behind the sidewalk. In other areas where pedestrian traffic is prevalent, the use of breakaway supports will be considered on a case-by-case basis by the Town of Brownsburg.
4) Traffic Signals. Traffic signal supports should be placed to provide the obstruction-free zone through the area where the traffic signal supports are located. However, the following exceptions will apply:
5) Channelized Islands. Installation of signal supports in channelizing islands should be avoided, if practical. However, if a signal support must be located in a channelizing island, a minimum clearance of 30 ft should be provided from all travel lanes (including turn lanes) in rural areas and in urban areas where the posted speed is greater than 45 mph. In urban areas where the island is bordered by a barrier curb and the posted speed is 45 mph or less, a minimum clearance of 10 ft should be provided from all travel lanes (including turn lanes).
6) Non-Curbed Facilities (Posted Speeds ≥ 50 mph and ADT > 1500). Where conflicts exist such that the placement of the signal supports outside of the obstruction-free zone is impractical (e.g., conflicts with buried or utility cables), the signal supports should be located at least 10 ft beyond the outside edge of the shoulder.
7) Non-Curbed Facilities (Posted Speeds < 50 mph or ADT ≤ 1500). Where conflicts exist such that the placement of the signal supports outside of the obstruction-free zone is impractical (e.g., conflicts with buried or utility cables), the signal supports should be located at least 6.5 ft beyond the outside edge of the shoulder.
8) Culverts. Culvert ends are considered to be within the obstruction free zone if the point at which the top of the culvert protrudes from the slope is within the obstruction free zone. Transverse Slopes on Side Roads and Private Drives. Steep transverse slopes on side roads and private entrances should be considered for flattening, if practical. Desirably these slopes should be 6:1 or flatter, but in no case should they be steeper than 4:1. Transverse slopes on median crossovers will be 10:1 or flatter.
9) Curbs. Curbs should generally be removed on rural highways where posted speeds are greater than 45 mph. The proper placement of traffic control devices must be considered in reviewing the removal of

corner island curbs where such devices are located. This item is not intended to cover divisional (channelizing) islands separating two-way traffic or curbs at the edge of shoulder for drainage. In the latter two cases, sloping curbs should be used on highways with posted speeds greater than 45 mph. Curbs higher than 4 in. should not be used in conjunction with guardrail. The face of curbs, used in conjunction with guardrail, should desirably be behind the face of the rail. If this cannot be achieved, the face of the curb may be located flush with the face of the rail.

10) Utility Poles. Utility poles within the obstruction free zone which are not owned by the Town of Brownsburg or INDOT often constitute a significant hazard and should be removed or relocated. Utility companies should be requested to relocate utility poles that are located in high vulnerability areas such as channelizing islands, or where the accident history indicates there has been a utility pole accident problem. The Town of Brownsburg, based on their judgment, will determine where such work is warranted.

11) Non-Traversable Hazards. Fill slopes steeper than 1:1 with a height greater than 2 ft within the obstruction free zone should be flattened to the extent practical. If any part of a drainage ditch appears within the obstruction-free zone, it should be relocated.

PART 2 - PRODUCTS

Not Used.

PART 3 - EXECUTION

Not Used.

PART 4 - FIGURES

4.01 Associated Standard Details

Detail No.	Description
TR-01	Concrete Chair Back Curb & Gutter
TR-02	Concrete Roll Curb & Gutter
TR-15	Minimum Entrance Requirements
TR-16	Roadway Improvements at New Development Entrances
TR-17	Commercial & Industrial Cul-de-Sac Turnarounds
TR-18	Residential Cul-de-Sac Turnarounds Street Class 1
TR-19	Temporary Cul-de-Sac Street Class 1
RS-01	Typical Cross Sections – Primary Arterials A1 and A2
RS-02	Typical Cross Sections – Primary Arterials B1 and B2
RS-03	Typical Cross Sections – Primary Arterials C1 and C2
RS-04	Typical Cross Sections – Secondary Arterials A1 and A2
RS-05	Typical Cross Sections – Collectors 1 and 2

Detail No.	Description
RS-06	Typical Cross Sections – Neighbor Collectors 1 and 2
RS-07	Typical Cross Sections – Local 1 (No Parking), Local 2 (Parking Both Sides) and Local 3 (Parking One Side)
RS-08	Typical Trail Cross Section

END OF SECTION 02501

SECTION 02502 – STANDARDS OF ROADWAY CONSTRUCTION

PART 1 - GENERAL

1.01 Road construction shall conform to the following requirements and standards:

A. Streets, General

1. Streets and alleys shall be graded, surfaced, and improved to the dimensions required by the cross-sections and the work shall be performed in the manner prescribed in Section 02500 – Paving and Surfacing and the Indiana Department of Transportation (INDOT) Standard Specifications.
2. Prior to placing the street and alley surfaces, adequate subsurface drainage (underdrains) for the street shall be provided by the subdivider. Underdrain pipe shall conform to Section 02710 – Underdrain Systems and the INDOT Standard Specifications.
3. Concrete and bituminous asphalt paving mixes shall comply with specifications contained in Section 02500 – Paving and Surfacing.
4. Before any bond covering a street installation is released, the Town of Brownsburg or duly authorized representative may request that core borings of the street be provided, at the subdivider's expense, for thickness and/or compaction determination.
5. Prior to the acceptance of asphalt streets, the subdivider shall employ and pay for the services of an independent testing laboratory to take cores at selected locations and perform Marshall stability, flow and density test, and percent of compaction determination on completed asphalt work if so directed by the Town of Brownsburg or duly authorized representative.
6. Prior to acceptance of concrete streets, subdividers must provide satisfactory test results from an independent testing laboratory to the Town of Brownsburg or duly authorized representative.
7. A developer may request permission from the Town of Brownsburg to delay the installation of the surface layer of asphalt until the binder layer of asphalt has had sufficient time to prove its durability under the stress of heavy construction traffic, but not to exceed one (1) year. The developer shall be required to submit a separate performance bond to cover the cost of the installation of the 1-inch surface layer of asphalt.
8. All traffic control devices shall comply with guidelines and requirements of the current edition of the Indiana Manual on Uniform Traffic Control Devices.

B. Subgrade for Street Pavements

1. Preparation
   a. After all earth work is substantially complete and all drains installed, the subgrade shall be brought to the lines and grades shown on the plans.
   b. Unless otherwise provided, the upper six (6) inches of all subgrade shall be uniformly compacted to at least 95 percent standard density as determined by the provisions of AASHTO, T99, "Compaction and Density of Soils". During subgrade preparation and after its completion, adequate drainage shall be provided at all times to prevent water from standing on

the subgrade. Subgrades shall be so constructed that it will have uniform density throughout. After compaction and final grading, the subgrade shall be finished with a three-wheel roller weighting not less than ten (10) tons. For areas not accessible to the roller, the required compaction shall be obtained by using mechanical tampers.

c. All soft yielding or otherwise unsuitable material which will not compact properly shall be removed. All rock encountered shall either be removed or broken off to conform with required cross sections. Any holes or depressions resulting from the removal of such unsuitable material shall be filled with approved material and compacted to conform with the surrounding subgrade surface. No placement of pavement shall be permitted on uninspected or unapproved subgrade and, at no time, when the subgrade is frozen or muddy. No hauling shall be done nor equipment moved over the subgrade when its condition is such that undue distortion results. If these conditions are present, the subgrade shall be protected with adequate plank runways, mats, or other satisfactory means if hauling is to be done thereon.

d. The subgrade shall be prepared sufficiently in advance to facilitate proper inspection of final elevations and compactions by the Town of Brownsburg or duly authorized representative.

e. All utility and drainage excavations under pavement shall be backfilled with compacted granular backfill and/or flowable fill, as specified in Section 02220 – Trenching, Backfilling and Compaction for Utilities. These locations shall be illustrated on construction drawings submitted to the Town of Brownsburg.

2. Rigid Pavement Construction - When concrete is placed, the subgrade shall be properly dampened. Concrete pavement shall be constructed in accordance with Section 02500 – Paving and Surfacing, and INDOT Standard Specifications.

C. Pavement Section - Typical pavement sections for trails shall conform to the cross section shown in Standard Detail RS-08. The use of alternative cross sections shall be approved by the Town of Brownsburg.

D. Curbs and Gutters

1. Developers shall provide curbs and gutters on each side of the street in proposed development.
2. Curbs and gutters shall comply with standard details shown in Standard Details TR-01 and TR-02. As an alternate, curb sections which comply with INDOT standard details will be permitted upon approval the Town of the Brownsburg.
3. All curb and gutter sections placed on Primary Arterials, Secondary Arterials, or Collectors shall be of the barrier type. Roll-type curb and gutter sections will be permitted for Local Roads and Streets.
4. Curbs and gutters shall be constructed according to Section 02500 – Paving and Surfacing:
   a. The minimum grade of any street gutter shall be not less than three-tenths percent (0.3%).
   b. Inlet grates shall be heavy duty type recommended for bicycle traffic.

5. Curb radii and a minimum of fifteen feet from the curb radius tangent points shall be painted yellow with INDOT approved paint and reflectorized with INDOT approved glass beads. Greater than fifteen feet along the tangent may require painting if sight distance calculations dictate, and/or if a fire hydrant is located along the curb to be painted. See Standard Detail TR-24.

E. Sidewalks, Pedestrian Paths, Bicycle Ways and Multi - Use Trails

1. Pedestrian facilities shall be constructed in accordance with the Proposed Accessibility Guidelines for Pedestrian Facilities in the Public Right-of-Way (PROWAG).
2. Sidewalks shall be at least five (5) feet wide at all locations. Sidewalks shall be concrete in accordance with Section 02500 – Paving and Surfacing. Expansion joints shall be located every 48 feet and control joints every six (6) feet.
3. Curb ramps shall comply with the most current INDOT and ADA requirements. Refer to INDOT Standard Drawings E 604-SWCR for curb ramp types and configurations.
4. Pedestrian paths, other than sidewalks, shall be constructed to a minimum width of twelve (12) Feet. The paths shall be constructed of asphalt, crushed stone, bark chips, paving stones, or other similar surface material.
5. Bicycle ways and Multi - Use Trails shall be constructed to a minimum width of eight (8) feet with a maximum grade of eight percent (8%). The ways/paths shall be constructed of concrete or asphalt. Concrete ways and Multi - Use trails shall be at least four (4) inches thick and shall include wire fabric reinforcing of a size "6 x 6 - W2 x W2". Asphalt ways and Multi - Use Trails shall be constructed using the following as a minimum requirement:
   a. Four (4) inches Compacted Aggregate Size No. 53, stone base
   b. Two (2) inches 19.0mm HMA Intermediate
   c. One (1) inch 9.5mm HMA Surface
6. All ways and Multi-Use Trails shall be placed on properly prepared and compacted subgrades. Materials shall be furnished and installed in accordance with Section 02500 – Paving and Surfacing, and INDOT Standard Specifications.
7. When sidewalks or pathways cross major street intersections within or adjacent to a subdivision, necessary traffic control devices such as painted crosswalks and signs shall be installed at the subdivider's expense at the discretion of the Town of Brownsburg.
8. When bike ways are located on streets, they should be constructed to the same standards as the roadway on which they are located.
9. If not located within public rights-of-way, easements of at least ten (10) feet in width shall be provided for sidewalks, pedestrian paths, or bicycle paths.

F. Guardrail – An engineer registered in the State of Indiana shall determine if a crash tested system is required and designed appropriately for proposed locations. The Town of Brownsburg will determine if guardrail materials are to be steel or wood.

1. Steel guardrail shall conform to INDOT standards and specifications.

2. Wood guardrail that is required to be a crash tested system shall be Federal Highway approved Steel-Backed Timber Guardrail, as manufactured by American Timber and Steel, Norwalk, Ohio, or other Federal Highway approved, crash tested system determined to be an approved equal by the Town of Brownsburg.
3. Wood guardrail that is not required to be a crash tested system may be Square American Timber Rail, as manufactured by American Timber and Steel, Norwalk, Ohio, or other system determined to be an approved equal by the Town of Brownsburg.

G. Easements - Whenever possible, easements for poles or underground conduits for electrical power, or telephone lines shall be provided along rear lot lines.

H. Plans - Construction plans for improvements to be installed shall be furnished in accordance with the specifications of the Town of Brownsburg and/or, when appropriate, to the Hendricks County Highway Department. Such plans must receive all appropriate approvals before improvements are installed. Upon completion of street and alley improvements, as-built plans shall be filed with the Town of Brownsburg and when appropriate, to the proper governing body of Hendricks County. All construction plans shall include the following:

1. Horizontal geometry of each proposed street, with centerline and curb radii shown.
2. The profile of each proposed street, with grades indicated, and lengths of vertical curves.
3. The cross-section of each proposed street, showing the width of pavement, the location and width of sidewalks, and the location and size of utility mains.

I. Inspection - Prior to starting any construction, arrangements shall be made for inspection of work to ensure compliance with plans and specifications approved by the Town of Brownsburg or, when appropriate, the Hendricks County Highway Department.

J. All construction must be approved by the Town of Brownsburg and notice of construction must be given to the Town of Brownsburg or duly authorized representative, 48 hours (not including holidays or weekends) prior to beginning work.

K. Allowable Modifications - Where unusual or exceptional factors or conditions exist, the Town of Brownsburg may allow minor modifications of any provision of this Section. When such modifications are allowed, a detailed written statement of the reasons for such modifications shall be attached to all copies of construction plans.

PART 2 - PRODUCTS

Not Used.

PART 3 - EXECUTION

Not Used.

PART 4 - FIGURES

4.01 Associated Standard Details

Detail No.	Description
TR-01	Concrete Chair Back Curb & Gutter
TR-02	Concrete Roll Curb & Gutter
TR-03	Driveway Curb Cut
TR-04	Curb Inlet Detail
TR-05	Concrete Center Curb
TR-06	Concrete Sidewalk Detail
TR-07	Sidewalk ADA Ramp Detail
TR-08	Truncated Dome Detail
TR-09	Commercial & Industrial Street Pavement & Underdrain Pipe Detail
TR-10	Residential Street Pavement & Underdrain Pipe Detail
TR-11	Storm Sewer Lateral Connection at Road Underdrain
TR-12	Connection to Existing Streets
TR-13	Widening Detail
TR-14	HMA Pavement Trench Repair Detail
TR-24	Curb Painting Requirements
RS-01	Typical Cross Sections – Primary Arterials A1 and A2
RS-02	Typical Cross Sections – Primary Arterials B1 and B2
RS-03	Typical Cross Sections – Primary Arterials C1 and C2
RS-04	Typical Cross Sections – Secondary Arterials A1 and A2
RS-05	Typical Cross Sections – Collectors 1 and 2
RS-06	Typical Cross Sections – Neighbor Collectors 1 and 2
RS-07	Typical Cross Sections – Local 1 (No Parking), Local 2 (Parking Both Sides) and Local 3 (Parking One Side)
RS-08	Typical Trail Cross Section

END OF SECTION 02502

SECTION 02504 – ADJACENT ROADWAY IMPROVEMENTS

PART 1 - GENERAL

1.01 Roadways adjacent to proposed developments shall conform to the following requirements and standards:

A. Adjacent Roadway Improvements

1. Developers shall be responsible for improvements to the existing roadway(s) that front their property. These improvements shall include, but are not limited to, the following items:
   a. Construction of acceleration lanes, deceleration lanes, and passing blisters for each entrance or street intersection as indicated by Standard Details TR-14 and TR-15.
   b. In order to construct adequate acceleration lanes, deceleration lanes, and passing blisters, right-of-way shall be obtained which has a width consistent with the most current accepted Thoroughfare Plan.
   c. The existing roadway along the development frontage shall be widened to match the width requirements based on the functional classification of the roadway as defined by the Thoroughfare Plan. Once widened, the entire roadway fronting the development shall be resurfaced for consistency.
2. Additional improvements may be required depending on field conditions and as determined by the Town of Brownsburg.

PART 2 - PRODUCTS

Not Used.

PART 3 - EXECUTION

Not Used.

PART 4 - FIGURES

4.01 Associated Standard Details

Detail No.	Description
TR-01	Concrete Chair Back Curb & Gutter
TR-02	Concrete Roll Curb & Gutter
TR-03	Driveway Curb Cut
TR-04	Curb Inlet Detail
TR-05	Concrete Center Curb
TR-12	Connection to Existing Streets
TR-13	Widening Detail
TR-15	Minimum Entrance Requirements
TR-16	Roadway Improvements at New Development Entrances

Detail No.	Description
RS-01	Typical Cross Sections – Primary Arterials A1 and A2
RS-02	Typical Cross Sections – Primary Arterials B1 and B2
RS-03	Typical Cross Sections – Primary Arterials C1 and C2
RS-04	Typical Cross Sections – Secondary Arterials A1 and A2
RS-05	Typical Cross Sections – Collectors 1 and 2
RS-06	Typical Cross Sections – Neighbor Collectors 1 and 2
RS-07	Typical Cross Sections – Local 1 (No Parking), Local 2 (Parking Both Sides) and Local 3 (Parking One Side)
RS-08	Typical Trail Cross Section

END OF SECTION 02504

SECTION 02505 – END OF ROADWAY

PART 1 - GENERAL

1.01 Roadways terminated for future extension and development shall conform to the following requirements and standards:

A. Temporary Cul-de-Sac

1. Developers shall be responsible for constructing a temporary cul-de-sac on all streets with temporary termination. Temporary cul-de-sac shall conform to Standard Detail TR-19.
2. Temporary cul-de-sacs must provide appropriate drainage to prevent ponding. Street underdrains shall be extended the full length of temporary cul-de-sac.

B. Stubbed Streets

1. Streets stubbed out within 100 feet of an intersection shall be provided with a Standard Barricade in lieu of a temporary cul-de-sac. Standard barricades shall conform to Standard Detail TR-21.
2. With approval of the Town of Brownsburg, developer may provide End of Roadway Signage in lieu of a standard barricade. End of roadway signage shall conform to Standard Detail TR-20.

PART 2 - PRODUCTS

Not Used.

PART 3 - EXECUTION

Not Used.

PART 4 - FIGURES

4.01 Associated Standard Details

Detail No.	Description
TR-19	Temporary Cul-de-Sac Street Class 1
TR-20	End of Roadway Detail
TR-21	Standard Barricade

END OF SECTION 02505

SECTION 02506 – SIGNAGE

PART 1 - GENERAL

1.01 Uniform traffic signage is required throughout the Town of Brownsburg. All traffic signage in the Town shall conform to current Manual of Uniform Traffic Control Devices (M.U.T.C.D.), Indiana Supplements, INDOTSS 802, and the following requirements and standards:

A. Public Streets

1. All street name signs for public streets maintained by the Town of Brownsburg shall have a “Brownsburg Purple” face with white font and white “Brownsburg Bulldog” logo.
2. All traffic signs shall be installed on black powder coated round posts with breakaway hardware and an acorn finial. Single sided signs shall have the back side of the sign black powder coated or be covered with black sign material. Street name signs shall be mounted on a black powder coated cantilever sign frame.

B. Private Streets

1. All street name signs for private streets and streets not maintained by the Town of Brownsburg shall have a Blue face with white font.
2. Signs for private streets shall be installed on black powder coated round posts with breakaway hardware and an acorn finial. Single sided signs shall have the back side of the sign black powder coated or be covered with black sign material. Street name signs shall be mounted on a black powder coated cantilever sign frame.

C. Federally Funded Routes

1. All street name signs along the following federally funded routes shall be in accordance with the Brownsburg Wayfinding Signage Plan, Sign Type 40.
   a. 56th Street
   b. Green Street (SR 267)
   c. Main Street (US 136)
   d. Northfield Drive
2. Signs for federally funded routes shall be installed on frames in accordance with the Brownsburg Wayfinding Signage Plan frame details for Sign Type 40. Sign posts shall include breakaway hardware.

D. Roundabouts

1. Developers and designers shall be responsible for providing signage at roundabouts that conforms to Standard Detail TR-22.

PART 2 - PRODUCTS

Not Used.

PART 3 - EXECUTION

Not Used.

PART 4 - FIGURES

4.01 Associated Standard Details

Detail No.	Description
TR-22	Standard Single Lane Roundabout Signage Detail

END OF SECTION 02506

SECTION 02660 - WATER MAINS

PART 1 - GENERAL

1.01 Summary

A. Section Includes: Furnishing and installing all water mains, fittings, valves, hydrants, casings and appurtenances as required for completing the work as shown on the Drawings and as specified herein.

B. Related Sections

1. Section 02220 - Trenching, Backfilling and Compaction for Utilities
2. Section 02224 - Trenchless Excavation – Horizontal Borings
3. Section 02226 - Trenchless Excavation – Directional Drilling
4. Section 02661 - Water Services
5. Section 02675 - Disinfection

1.02 References

A. American Society of Mechanical Engineers (ASME), latest editions

1. ASME B16 - Standards of Pipes and Fittings
2. ASME B18 - Hex Cap Screw, Hex Bolt, Machine Bolt fasteners
3. ASME B31 - Standards of Pressure Piping

B. American Society for Testing and Materials (ASTM), latest editions

1. ASTM A194 - Carbon and Alloy Steel Nuts for Bolts for High Pressure or High Temperature Service, or Both
2. ASTM A307 - Carbon Steel Bolts and Studs, 60,000 psi Tensile Strength
3. ASTM C94 - Standard Specification for Ready-Mixed Concrete
4. ASTM D1330 - Rubber Sheet Gaskets
5. ASTM D3261 - Butt Heat Fusion Polyethylene (PE) Plastic Fittings for Polyethylene (PE) Plastic Pipe and Tubing
6. ASTM D3350 - Polyethylene Plastics Pipe and Fittings Materials
7. ASTM F477 - Elastomeric Seals (Gaskets) for Joining Plastic Pipe

C. American Water Works Association (AWWA) Standards, latest editions

1. AWWA C104 - Cement Mortar Lining for Ductile Iron Pipe and Fittings
2. AWWA C110 - Ductile Iron and Gray Pipe Fittings
3. AWWA C111 - Rubber Gasket Joints for Ductile Iron Pressure Pipe and Fittings
4. AWWA C151 - Ductile Iron Pipe, Centrifugally Cast
5. AWWA C153 - Ductile Iron Compact Fittings for Water Service (3-inch through 64-inch)
6. AWWA C207 - Steel Pipe Flanges for Waterworks Service (4-inch through 144-inch)

7. AWWA C502 - Dry Barrel Hydrants
8. AWWA C509 - Resilient-Seated Gate Valves for Water Supply Service
9. AWWA C515 - Reduced-Wall, Resilient-Seated Gate Valves for Water Supply Service
10. AWWA C600 - Installation of Ductile-Iron Water Mains and their Appurtenances
11. AWWA C651 - Disinfecting Water Mains
12. AWWA C906 - Polyethylene (PE) Pressure Pipe and Fittings, (4-inch through 63-inch), for Water Distribution and Transmission

D. Indiana Department of Environmental Management (IDEM) Regulations in 327 of the Indiana Administrative Code (IAC), latest edition

E. Indiana Plumbing Code, latest edition

1.03 Submittals

A. Product Data

1. Pipe
2. Valves
3. Casing Pipe
4. Fittings
5. Air relief valves
6. Joint restraints
7. Hydrants
8. Concrete
9. Other related items and appurtenances

B. Test Results

1. Hydrostatic test
2. Continuity test
3. Fusion joint log (HDPE Pipe)

C. Other Items

1. HDPE bonding qualifications

1.04 Quality Assurance

A. HDPE Pipe: Bonders and bonding operators shall be qualified in the use of the written bonding procedure specification (BPS) as required by ASME B31.3, Chapter VII, paragraph A-328. Qualification records certifying that bonders and bonding operators employed to perform the fusion bonding are qualified in the BPS shall be submitted prior to the commencement of fusion bonding work. Bonders and bonding operators shall be qualified for the specific fusion bonding equipment utilized in the fusion bonding work.

1.05 Delivery, Storage, and Handling

A. Acceptance at Site

1. Deliver, store and handle all materials in accordance with manufacturer's recommendations.
2. Load and unload all pipe, fittings, valves, hydrants, and appurtenances by hoists. Do not drop materials. Do not skid or roll materials on or against each other. Use padded slings, hooks and pipe tongs to handle materials in a manner to prevent damage.
3. Pipe possessing defects including, but not limited to, the following will be rejected for installation:
   a. Variations from straight centerline
   b. Elliptical shape in round pipe
   c. Lack of rigidity
   d. Illegible markings as required herein
   e. Bruised, broken, or otherwise damaged metallic or bituminous coating or liner, as applicable
   f. Deep or excessive gouges, dents, bends, or scratches on the pipe wall
   g. Fractures, punctures, or cracks passing through the pipe wall
   h. Damaged or cracked ends where such damage would prevent making a satisfactory joint
4. All materials deemed damaged by the Town will not be accepted.

B. Storage and Protection

1. Store materials in an area safe from damage and deterioration. Keep the interior of pipe, fittings, valves, hydrants and appurtenances free from dirt and foreign matter. Drain and store valves and hydrants in a manner to prevent damage from freezing. Store gaskets in a cool location out of direct sunlight and free from contact with petroleum products.
2. Do not stack any pipe higher than recommended by manufacturer. Do not stack fittings, valves, and hydrants.

1.06 Warranty

A. Locate and repair leaks on any and all water mains installed that occur within the warranty period at no cost to the Town.

PART 2 - PRODUCTS

2.01 General

A. All pipes, fittings, valves, hydrants, and appurtenances shall be new and unused.

2.02 Manufacturers

A. Contact the Water Department for a list of approved material manufacturers.

B. Brownsburg Water will not approve Ford meter or pipe fittings.

2.03 Ductile Iron (DI) Water Main

A. Pipe and Fittings

1. Provide ductile iron pipe centrifugally cast in metal or sandlined molds and conforming to AWWA C151. Pipe shall be designed for a minimum of 350 PSI rated water working pressure in accordance with Table 1 for 12-inch diameter and smaller pipe and a minimum of 250 PSI rated working pressure for 18-inch diameter and larger pipe.
2. Provide mechanical joint DI fittings conforming to AWWA C153 and AWWA C110.
3. Furnish DI pipe and fittings which have a standard thickness cement mortar lining as specified in AWWA C104 and a bituminous seal outside coating as specified in AWWA C151.
4. Furnish gaskets for mechanical joint fittings and DI pipe push-on joints which conform to AWWA C111.

B. Joints and Joint Restraint

1. Supply the pipe with push-on type joints conforming to AWWA C111 unless otherwise noted.
2. Use restrained joints in addition to thrust blocking.
3. Provide restrained joints for all pipe installed in steel casing.
4. Restrain pipe joints as specified in Part 3 of this section.

C. Pipe Markings

1. Each length of pipe shall be clearly marked with the following information at a minimum, in conformance with AWWA C151:
   a. Manufacturer's name or trade mark
   b. Pipe class
   c. Year of manufacture

D. Nuts and Bolts

1. Furnish high-strength, heat treated cast iron nuts and bolts which conform to AWWA C111. Nuts shall be hexagon and bolts shall be tee head.
2. Nuts and bolts for tapping sleeves shall be stainless steel.

2.04 High Density Polyethylene (HDPE) Water Main

A. Pipe

1. Provide HDPE pipe conforming to AWWA C906. Supply HDPE pipe manufactured from high density, extra high molecular weight polyethylene and conforming to PE Standard Code PE 4710. Polyethylene pipe shall have a minimum cell classification of 445474C per the requirements of ASTM D3350.
2. Supply minimum DR-9 HDPE pipe designed and manufactured to pressure class 250. Supply HDPE pipe designed to withstand crushing, buckling and

deformation resulting in ovality at a depth of bury indicated. Furnish HDPE pipe designed and manufactured in ductile iron pipe size.

3. Do not deflect HDPE pipe on a radius of less than 50 times the pipe diameter or less than the manufacturer's recommendation. If an HDPE fitting, flange or mechanical joint is present within the length of pipe to be deflected, do not deflect on a radius of less than 100 times the pipe diameter.
4. Provide HDPE pipe which has a blue shell or blue permanent striping and the AWWA specification stamp embedment or permanent blue-line print clearly and continuously marked longitudinally along the outside pipe wall.

B. Fittings

1. Provide HDPE fittings manufactured from high density, extra high molecular weight polyethylene which conforms to PE Standard Code PE 4710. All HDPE fittings shall have a minimum cell classification of 445474C per the requirements of ASTM D3350.
2. Furnish fabricated polyethylene fittings designed and manufactured for one pressure class rating higher than the pressure class rating of the pipe specified in this section.
3. Provide HDPE fittings manufactured per the requirements of ASTM D3261 and which are injection molded or fabricated using a combination of extrusion and machining. Fabricate HDPE fittings from HDPE pipe specified in this section. Supply HDPE fittings manufactured or fabricated in facilities designed for that purpose. Field fabricated HDPE fittings will not be allowed.
4. Provide HDPE fittings which have a blue shell or permanent blue striping and the AWWA pipe specification stamp embedment or permanent blue-line print clearly and continuously marked longitudinally along the outside wall.

C. Flange Backup Rings and Gaskets

1. Provide flange backup rings conforming to AWWA C207. Supply ring type Class D with bolting dimensions conforming to ASTM B16.5.
2. Furnish flange backup rings having fusion-bonded epoxy coating applied to all exterior and interior exposed surfaces with a minimum dry film thickness of 4 mil.
3. Provide flange gaskets which are synthetic red rubber (SBR) hardness (Shore A) 80 +/- 5, ring or full face, 1/8-inch thick and conform to ASTM D1330 grades I and II. Asbestos gaskets will not be allowed.
4. Supply flange to flange connection bolts which are carbon steel, ASTM A307 grade B for Class D flanges. Supply nuts conforming to ASTM A194 grade 2H. Furnish bolts and nuts having regular unfinished hexagonal dimensions in accordance with ASTM B18.2.1 for wrench head bolts and nuts and wrench openings. Minimum bolt lengths shall be the sum of the mating flange maximum thicknesses, the gasket and the depth of nut plus 1/8 inch minimum before torquing.

D. Mechanical Joints

1. Use polyethylene mechanical joint adaptors when making connections to mechanical joint fittings and when connecting to dissimilar pipe materials

(e.g., ductile iron). Supply polyethylene mechanical joint adaptors complying with the specifications contained herein for HDPE fittings. Connect polyethylene mechanical joint adaptor to mechanical joint fitting by means of a mechanical joint gland and gasket in accordance with the specifications regarding mechanical joint ductile iron fittings contained herein and in accordance with AWWA C110, AWWA C111 and AWWA C153. Meg-A-Lugs and Field-Lok gaskets will not be allowed for use with polyethylene mechanical joint adaptors.

2. Provide “Harvey” style polyethylene mechanical joint adaptors (transition coupling) which include a stainless steel stiffener inserted into the inside of the mechanical seal end of the adaptor to provide additional axial strength and prevent pipe diameter reduction at the seal. Provide transition coupling as a kit complete with gasket, mechanical gland, bolts and nuts per this section.

E. Pipe Markings

1. Each length of pipe shall be clearly marked with the following information at a minimum, in conformance with AWWA C906:
   a. Nominal size and diameter base
   b. Dimension ratio (DR-9)
   c. Manufacturer's name or trademark
   d. Material designation code (PE 4710)
   e. Pressure class (PC 250)
   f. AWWA designation number (AWWA C906)
   g. Manufacturer's production (lot) code
   h. Date of manufacture
   i. Seal or mark of testing agency certifying tubing for potable water service

2.05 Valves

A. Gate Valves - Provide resilient seated gate valves with mechanical joint ends conforming to AWWA C509 or AWWA C515. Valves shall be iron body with bronze stem nuts, glands and bushings, and shall be non-rising stem type with O-ring packing. Valves shall open counterclockwise (left) and have a 2-inch operating nut.

B. Tapping Valves - Provide iron body, non-rising stem gate valves conforming to AWWA C515. Supply valve gates, gate rings and body-seat rings which are oversized to permit entry and exit of tapping machine cutters. Valve end connecting to tapping sleeve shall have a flange for bolting to the sleeve. The flange shall have a tongue which fits a recess in the tapping sleeve. Mechanical joint tapping sleeves are not allowed. Valve end connecting to plain end of water main pipe or adapter shall be mechanical joint. Provide valves which open counterclockwise (left) and have a 2-inch operating nut. Provide stainless steel tapping sleeves for tapping valves with a coated carbon steel or stainless steel flange end branch connection. Supply tapping sleeve with oversized branch connection inside diameter to permit entry and exit of tapping machine cutters. Flange end shall have a recess to center the tapping valve.

C. Air Release Valves – Provide air release valve with cast iron body, cover and baffle; stainless steel float brass water diffuser; and Buna-N seat.

D. Butterfly valves are not acceptable.

2.06 Valve Boxes

A. Provide all buried valves with adjustable 5-inch diameter valve boxes with a minimum thickness of 3/16 inch, constructed so that the removable cover will not be thrown out by travel over it.

B. Provide cast iron, extension type valve boxes with slide or screw type adjustment to permit movement of the top section without transmitting forces onto the valve body.

C. Provide all valves boxes with a posi-cap or equivalent item for valve box stabilization and centering.

D. Covers for valve boxes on water service valves shall be marked "WATER".

2.07 Hydrant Assemblies

A. Standard Fire Hydrants - Provide dry barrel, compression shutoff, traffic model hydrants conforming to AWWA C502. Supply hydrants with 5-1/4-inch main valve opening, 6-inch mechanical joint inlets, two 2-1/2-inch hose nozzles with 7 1/2- national standard threads per inch, and one 4-1/2-inch pumper nozzle with a 5-inch Storz connection. Supply hydrants with nozzle threads and clockwise operating directions consistent with existing hydrants in the Town's distribution system.

B. Auxiliary Gate Valves - Install 6-inch auxiliary gate valve with every hydrant.

C. Provide each hydrant with a 2-component exterior grade full gloss polyurethane exterior enamel topcoat. Touch-up painting for field repairs shall be in accordance with Manufacturer's recommendations. Provide hydrant colors as follows:

1. Public hydrant: safety yellow
2. Private hydrant: safety red

2.08 Tracer Wire

A. Furnish tracer wire with all pipe.

B. For pipe installed by open excavation or within a casing pipe, provide one strand of solid 10-gauge AWG copper wire for the entire length of pipe.

C. For pipe installed by horizontal directional drilling, provide 2 strands of 10-gauge solid, steel core hard drawn extra high strength copper tracer wire for the entire length of pipe. Supply Copperhead Direct Burial tracer wire, or approved equal.

D. Provide splice kits suitable for underground installation for splices and branch connections. Seal connection with epoxy contained in splice kit and wrap with waterproof tape.

2.09 Meter Pits

A. Provide meter pits, and related items as indicated on the standard details and in accordance with Section 02661 - Water Services.

2.10 Additional Items

A. Concrete Blocking - Provide minimum 2,000 psi compressive strength concrete thrust blocking where indicated. Do not use packaged concrete (Quickrete, etc.).

B. Cast-in-Place Concrete - Provide ready-mixed concrete meeting the requirements of ASTM C94. Each cubic yard of concrete shall have:

1. Cement - minimum 6 bags
2. Air Content - 5 to 7 percent
3. Coarse Aggregate Size - maximum 1-1/2 inches
4. Slump - 3 to 5 inches
5. Compressive Strength - 4,000 psi unless noted otherwise

PART 3 - EXECUTION

3.01 General

A. Inspect water mains, fittings, valves, hydrants, and appurtenances prior to installation and promptly remove damaged or unsuitable materials from the job site. Replace damaged or unsuitable materials with new and unused materials.

B. Install all water mains, fittings, valves, hydrants, casing and appurtenances as shown on the standard details and as specified in this Section. Do not install pipe when, in the opinion of the Town, trench conditions are unsuitable.

C. Follow manufacturer's installation procedures when installing water mains, fittings, valves, hydrants and appurtenances.

3.02 Installation of Water Mains

A. Install water mains to the lines shown, except as specified in this Section.

B. Install all DI water mains and accessories in accordance with AWWA C600.

C. Water mains installed parallel to existing sanitary sewers or sewage force mains shall have a minimum horizontal separation of 10 feet measured from edge of pipe to edge of pipe. Where local conditions prevent this separation, water mains shall be installed with the bottom of the main at least 18 inches above the top of the sewer.

D. Water mains crossing sanitary sewers or sewage force mains shall have a minimum vertical separation of 18 inches measured from edge of pipe to edge of pipe. This separation shall apply whether the water main is above or below the sewer or force main. Install water mains so that a full length of pipe is centered on the sewer or force main. No water main shall pass through or come in contact with any part of a sanitary sewer manhole.

E. Install water mains with a minimum of 54 inches of cover.

F. Installed piping systems shall be temporarily plugged at the end of each day's work or other interruption of progress on a given line. Plugging shall be installed in a manner satisfactory to the Town, and it shall be adequate to prevent entry of animals into the pipe or the entrance or insertion of deleterious materials.

G. Follow manufacturer's installation procedures when installing water mains, fittings, valves, hydrants and appurtenances.

H. Excavate trenches to widths which provide adequate working space for proper pipe installation, jointing and embedment. Shape the bottom of trench to give uniform circumferential support to the lower quarter of each pipe. Lay pipe with bell ends facing in the direction of laying.

I. Lower pipe, fittings, valves and hydrants into trench by hand, by means of hoists or ropes, or by other suitable tools or equipment which will not damage materials, coatings or linings. Do not drop or dump pipe, fittings, valves or hydrants into trench.

J. As each length of pipe is installed, join the pipe to the previously installed pipe. Bring the pipe to the correct line and grade and secure in place with bedding tamped under and around each side of the pipe. Deposit and compact backfill material uniformly and simultaneously on each side of the pipe to prevent lateral displacement.

K. Wherever it is necessary to deflect pipe from a straight line in either a vertical or horizontal plane, the amount of deflection allowed shall not exceed that allowed by the pipe manufacturer's specifications. If the alignment requires joint deflections in excess of the allowable, furnish and install fittings or a sufficient number of shorter lengths of pipe.

L. Cut pipe in a neat and workmanlike manner without damage to the cement lining of DI pipe. Use a cutting machine so as to leave smooth ends at right angles to the axis of the pipe. Flame cutting with an oxyacetylene torch shall not be allowed on DI pipe. For bell and spigot joint installation, bevel the edges of all field cut pipe after cutting. For mechanical joint installation do not bevel the pipe end. Remove all burs that form as a result of field cutting the pipe, whether the pipe end is beveled or not.

M. Fusion Bonding Procedure for HDPE Pipe

1. The method of joining polyethylene pipe to polyethylene pipe or polyethylene fitting, other than those shown as flanged or otherwise mechanically connected, shall be by means of butt-fusion or sidewall fusion in accordance with the polyethylene pipe manufacturer's written bonding procedure specifications (BPS) and conforming to ASME B31.3, Chapter VII, paragraph A-328. BPS shall include, but not be limited to, cutting and facing requirements and shall utilize a data logger, such as the “Datalogger” manufactured by McElroy Manufacturing, Inc., to monitor and record the assembly of each butt-fusion or sidewall fusion joint.
2. Materials to be butt-fused or sidewall fused shall be from Standard Code PE 4710 and 445474C cell classification. Mechanical sleeves and saddles will not be allowed for branch or service connections.
3. Fusion bonding equipment specified in the BPS shall be clean and in proper operating condition capable of meeting all conditions and requirements of the pipe and bonding equipment manufacturer, including temperature, alignment and fusion pressure. Equipment heater performance shall be tested and certified prior to use for fusion bonding each day at start up and at one other time each day, no sooner than 4 hours after start up. A data logger for quality control shall electronically log each fusion joint, except as noted above. Logged fusion joints shall be stored in the data logger unit such that it can be downloaded. Logged fusion joints shall be printed weekly and submitted within 2 days of the completion of last fusion joint to the Town for review. One fusion joint for every 5 days of fusing bonding work will be removed and forwarded to a certified lab for testing. Testing shall include bend back tests of the fused joint per AWWA C906.

N. Allow HDPE pipe to reach ambient temperature for the installed condition before final cutting, installation of concrete restraint system, or connection of transition couplings.

3.03 Connections to Existing Water Mains

A. Locate the existing water mains vertically and horizontally, and verify their exact size in advance of making connections.

B. Perform any new connection that may cause loss of service to an existing customer after 10:00 pm and before 6:00 am.

3.04 Installation of Fittings, Valves, Hydrants, and Appurtenances

A. General

1. Clean the interiors of all fittings, valves and hydrants of foreign matter prior to installation. Inspect valves and hydrants in open and closed positions to ensure all parts are in working condition.
2. Provide adequate blocking in addition to thrust restraint for all hydrants, valves and fittings such as bends, tees and plugs as shown on the standard

details or a minimum of one full length of pipe on each side of all valves and fittings, whichever is more stringent.

3. Provide thrust restraint as shown on the Standard Details or a minimum of one full length of pipe on each side of all valves and fittings, whichever is more stringent.
4. Where concrete blocking is used, place concrete between fitting and solid trench wall where shown on the standard details. Concrete thrust blocking shall be quick set with a minimum of 2,000 psi compressive strength. Form concrete thrust block in place and do not cover bolted glands. Place a sheet of polyethylene plastic wrap between the main or fitting and concrete thrust block prior to placement of the concrete thrust block.

B. Valves

1. Place valves vertically on solid concrete block as shown on the standard details and bed them solidly. The valve box shall rest on the valve bonnet and be centered over the valve, and the top of the section shall be approximately on line with nut at top of valve stem. The entire assembly shall be plumb.
2. Place and compact backfill in lifts around valve box so valve box remains plumb. Tamp backfill on all sides of each valve box to the undisturbed trench face.
3. Adjust valve box covers so they are flush with finished grade. Re-adjust covers as necessary so that they remain flush with the finished grade after final paving and grading work is complete.
4. Isolation valves shall be required to provide zonal isolation. Maximum valve spacing shall be 800 feet or one per block, whichever is less. No valves shall be installed in the street, unless pre-approved by the Town.
5. Install air release valves in meter pits as shown on the standard details in locations as directed by the Town.

C. Hydrants

1. The locations of hydrants shall be determined at the Staff Review Meeting with the Town.
2. All hydrants shall be installed with a minimum bury not less than that required for the water mains. Check the hydrant locations and determine whether the hydrant requires a deeper bury depth.
3. Set hydrants plumb with the pumper nozzle facing toward the street or drive surface. Set hydrants so the centerline of hydrant outlet nozzles are not less than 18 inches nor more than 20 inches above finish grade. Provide hydrant extensions where required to obtain proper elevation. Install hydrants as shown on the standard details. Provide washed coarse gravel at hydrant shoe to ensure proper drainage of hydrant barrel. Place and compact backfill around hydrant to finish grade so that hydrant remains plumb. Furnish and install an auxiliary gate valve and valve box on each hydrant branch connection.
4. All hydrant installations must be inspected by the Town prior to backfilling.

5. At locations where a new hydrant assembly is to be installed on an existing water main, install new tee in the existing main to connect the new lead to the new hydrant assembly.
6. At locations where a hydrant is to be replaced with a new hydrant assembly and existing hydrant lead is smaller than required for the new hydrant, remove the existing tee, lead, valve, and hydrant. Install a new tee in the existing main with a new lead to the new hydrant assembly. Damage to hydrant coating shall be field repaired in accordance with the hydrant manufacturer's recommendations or the hydrant shall be replaced at no additional cost to the Town.
7. A standard fire hydrant with auxiliary gate valve is required at all dead end water mains. No blow-offs are allowed.
8. The maximum spacing between fire hydrants in residential neighborhoods and residentially zoned areas shall be 500 feet.
9. The maximum spacing between fire hydrants in commercial and industrial zoned areas shall be 300 feet.

D. Tracer Wire

1. Install tracer wire by taping to pipe in 15- to 20-foot intervals. Do not wrap wire around pipe. Install tracer wire on inside of all valve boxes with enough wire to extend 2 feet above the box. Seal splices and branch connections with epoxy and wrap with tape. Install one pound anodes every mile or less.
2. Assemble tracer wire splices and branch connections with 10 AWG splice kits suitable for underground installation. Remove 1/2 inch of insulation from wire. Tie together wires using an overhand knot to prevent pull apart and use a split bolt connector or solder to connect for electrical continuity. Seal connection with epoxy contained in splice kit and wrap with tape.

3.05 Field Quality Control

A. Filling and Disinfection

1. Fill and sterilize all new water mains, services, leads and appurtenances in accordance with AWWA C651 and Section 02675 - Disinfection.

B. Continuity Test

1. Conduct continuity test on all tracer wire. All tracer wire found not to be continuous after testing shall be repaired or replaced.

C. Hydrostatic Leakage Test

1. Hydrostatically test all water mains installed. Perform leakage test under a hydrostatic pressure in accordance with AWWA C600 and these specifications. The hydrostatic pressure shall be 150 psi or 1-1/2 times the working pressure at the point of testing, whichever is greater, but shall not exceed 150 psi at the lowest point in elevation of the system being tested. Allow the pipeline to stabilize at the test pressure before conducting the hydrostatic test.

2. The hydrostatic test shall be at least 2 hours in duration. Maintain the test pressure within +/-5 psi during the test period by adding makeup water using a test pump. At the end of the test duration, return the line pressure to the original test pressure by adding makeup water. Accurately measure the total amount of makeup water added during and at the end of the test duration, or leakage, in gallons by means of a water meter installed on the supply side of the pressure pump.
3. The pipe installation will not be accepted if the leakage is greater than that determined by the following formula in which L is the allowable leakage, in gallons per hour; S is the length of pipeline tested, in feet; D is the nominal diameter of the pipe, in inches; and P is the average test pressure during the leakage test, in pounds per square inch gage.:
   a. Ductile Iron $L=0.0000075SD(P)^{1/2}$ See Table 3.05-1
   b. Polyethylene See Table 3.05-2
4. Where the leakage rate exceeds the permissible maximum, locate and repair the leak or leaks. Repeat the leakage test until the test results are acceptable.
5. Repair all leaks discovered within the warranty period and retest the repaired segments to confirm leaks have been stopped.

Table 3.05-1: Allowable Leakage for Ductile Iron Pipe per 1000 ft. of Pipeline* - gph

Average Test Pressure	Nominal Pipe Diameter – in.					
psi	3	4	6	8	10	12
450	0.48	0.64	0.95	1.27	1.59	1.91
400	0.45	0.60	0.90	1.20	1.50	1.80
350	0.42	.056	0.84	1.12	1.40	1.69
300	0.39	0.52	0.78	1.04	1.30	1.56
275	0.37	0.50	0.75	1.00	1.24	1.49
250	0.36	0.47	0.71	0.95	1.19	1.42
225	0.34	0.45	0.68	0.90	1.13	1.35
200	0.32	0.43	0.64	0.85	1.06	1.28
175	0.30	0.40	0.59	0.80	0.99	1.19
150	0.28	0.37	0.55	0.74	0.92	1.10
125	0.25	0.34	0.50	0.67	0.84	1.01
100	0.23	0.30	0.45	0.60	0.75	0.90

**If the pipeline under test contains sections of various diameters, the allowable leakage will be the sum of the computed leakage for each size.*

Table 3.05-2 – Allowance for Expansion of HDPE Pipe Under Pressure* for Ambient Conditions

Nominal Pipe Size (inch)	Allowance for Expansion (U.S. gal per 100 feet of Pipe)		
	1-Hour Test	2-Hour Test	3-Hour Test
4	0.13	0.25	0.40
6	0.30	0.60	0.90
8	0.50	1.00	1.50
10	0.75	1.30	2.10
12	1.10	2.30	3.40

**These allowances only apply to the test phase and not the initial expansion phase. In addition, they assume that the pipe is being tested for a system design pressure equal to the pipe's pressure class. If the pipe is being tested to a lower system design pressure, the above allowances should be reduced by the ratio of the system design pressure to the pipe's pressure class.*

PART 4 - FIGURES

4.01 Associated Standard Details

Detail No.	Description
GE-01	General Utility Location Plan & Section
GE-02	Minimum Crossover and Separation Requirements for Sewer & Water Mains
DW-01	Transition Coupling
DW-02	Gate Valve
DW-03	Air Release Valve
DW-04	Hydrant Assembly
DW-05	Tracer Wire Bolted Connection
DW-06	Water Main Reaction Blocking
DW-07	Water Main Restrained Piping
DW-08	Cross Tap Configuration
DW-09	Valve Placement at Intersections

END OF SECTION 02660

SECTION 02661 - WATER SERVICES

PART 1 - GENERAL

1.01 Summary

A. Section Includes: Furnishing and installing all water service connections to Town water mains, including service taps, service lines, meter pits and appurtenances as required for completing the work shown or specified.

B. Related Sections

1. Section 02220 - Trenching, Backfilling and Compaction for Utilities
2. Section 02660 - Water Mains
3. Section 02675 - Disinfection

1.02 References

A. American Society for Testing and Materials (ASTM), latest editions

1. ASTM D2239 - Polyethylene (PE) Plastic Pipe (SIDR-PR) Based on Controlled Inside Diameter
2. ASTM D3350 - Polyethylene Plastics Pipe and Fittings Materials

B. American Water Works Association (AWWA), latest editions

1. AWWA C651 - Disinfecting Water Mains
2. AWWA C800 - Underground Service Line Valves and Fittings
3. AWWA C901 - Polyethylene (PE) Pressure Pipe and Tubing (1/2-inch through 3-inch) for Water Service

C. Indiana Department of Environmental Management (IDEM) Regulations in 327 of the Indiana Administrative Code (IAC), latest edition

D. Indiana Plumbing Code, latest edition

E. NSF Standard 14 – Plastic Pipe System Components

1.03 Submittals

A. Product Data

1. Service Lines
2. Meter Pits
3. Fittings
4. Other related items and appurtenances

B. Test Results

1. Continuity test

1.04 Delivery, Storage, and Handling

A. Acceptance at Site

1. Deliver, store and handle all materials in accordance with manufacturer's recommendations.
2. Load and unload all tubing, fittings, meter pits, and appurtenances by hoists. Do not drop materials. Do not skid or roll materials on or against each other. Use padded slings, hooks and pipe tongs to handle materials in a manner to prevent damage.
3. All meter pits, brass fittings, and lids/rings shall be delivered to the job site and be the Developers/Contractors responsibility.
4. All materials deemed damaged by the Town will not be accepted.

B. Storage and Protection

1. Store materials in an area safe from damage and deterioration. Keep the interior of tubing, fittings, and appurtenances free from dirt and foreign matter. Drain and store materials in a manner to prevent damage from freezing. Store gaskets in a cool location out of direct sunlight and free from contact with petroleum products.

1.05 Items to Be Provided By the Town

A. The Town will supply the meter. All other items required for the complete installation shall be provided by the Contractor.

1.06 Warranty

A. Locate and repair leaks on any and all water services between the meter pit and the main that occur within the warranty period at no cost to the Town.

PART 2 - PRODUCTS

2.01 General

A. All services lines, meter pits, and appurtenances shall be new and unused.

B. Provide products that meet the Reduction of Lead in Drinking Water Act which becomes effective on January 1, 2014.

2.02 Manufacturers

A. Contact the Water Department for a list of approved equipment and material manufacturers.

B. Brownsburg Water will not approve Ford meter or pipe fittings.

2.03 Corporation Stops

A. Provide AWWA taper inlet, compression connection for CTS O.D. outlet.

2.04 Service Line Tubing

A. Copper Service Line Tubing

1. Provide Type "K" copper service line tubing.

B. High Density Polyethylene (HDPE)

1. Provide DR-9 HDPE tubing in accordance with AWWA C901, ASTM 3350, ASTM D2239, and NSF 14. Supply HDPE pipe manufactured from high density, extra high molecular weight polyethylene and conforming to PE Standard Code PE 4710. Polyethylene pipe shall have a minimum cell classification of 445474C per the requirements of ASTM D3350.
2. Provide stainless steel stiffeners for HDPE service line.
3. Each length of pipe shall be clearly marked with the following information at a minimum, in conformance with AWWA C901:
   a. Nominal size and diameter base
   b. Dimension ratio or minimum wall thickness (DR-9)
   c. Manufacturer's name or trademark
   d. Material designation code (PE 4710)
   e. Pressure class (PC 250)
   f. AWWA designation number (AWWA C901)
   g. Manufacturer's production (lot) code
   h. Date of manufacture
   i. Seal or mark of testing agency certifying tubing for potable water service

2.05 Tracer Wire

A. Furnish tracer wire with all service lines.

B. For service line tubing installed by open excavation or within a casing pipe, provide one strand of solid 10-gauge AWG copper wire for the entire length of service.

C. For service line tubing installed by horizontal directional drilling, provide 2 strands of 10-gauge solid, steel core hard drawn extra high strength copper tracer wire for the entire length of service. Supply Copperhead Direct Burial tracer wire, or approved equal.

D. Provide splice kits suitable for underground installation for splices and branch connections. Seal connection with epoxy contained in splice kit and wrap with waterproof tape.

2.06 Meter Pits

A. For service line sizes 3/4-inch through 2-inch, provide 54-inch pre-fabricated meter pits.

B. For service line sizes larger than 2-inch, provide pre-cast concrete meter vaults unless meter is installed inside building.

2.07 Building Meters

A. Provide building meter settings with by-pass shut off.

2.08 Additional Items

A. All fitting connections shall be compression. No solder of any type will be accepted.

B. Concrete Blocking - Provide minimum 2,000 psi compressive strength concrete blocking where indicated. Do not use packaged concrete (Quickrete, etc.).

PART 3 - EXECUTION

3.01 General

A. Request for water service shall be directed through the Water Utility Office in the Brownsburg Municipal Center, (317) 852-1129. At no time should service be requested through the Water Field Office.

B. The Brownsburg Utility Office requires a minimum of 24 hours advance notice for all water taps and meter sets. No water taps or meter sets shall be made without a written work order issued from the Brownsburg Utility Office.

C. When setting water meter pits or installing water main taps all specifications below shall be followed and enforced. Any alterations to these specifications must be approved by Brownsburg Water Department Personnel.

D. Service line length and placement will be determined at the Staff Review Meeting with the Town. No taps will be permitted under driveways.

E. A total count of the meter pits is required as soon as the Town approves the construction drawings.

F. Trenching and backfilling shall be in accordance with Section 02220 - Trenching, Backfilling, and Compaction for Utilities.

G. Inspect water services, fittings, meter pits and appurtenances prior to installation and promptly remove damaged or unsuitable materials from the job site. Replace damaged or unsuitable materials with new and unused materials.

H. Install all water services, fittings, meter pits and appurtenances as shown on the standard details and as specified in this Section. Do not install items when, in the opinion of the Town, trench conditions are unsuitable.

I. Absolutely no electrical boxes, transformers, or telephone boxes are to be installed between the water meter pit location and the proposed building structure.

3.02 Items to Be Installed By the Town

A. The Town will install the meter. All other installation is the responsibility of the Contractor.

3.03 Installation of Water Services

A. After new mains have been tested, sampled and approved, install new corporation stops on the new main at the locations of new service lines.

B. Follow manufacturer's installation procedures for installation.

C. All service lines shall be buried to a depth of 54 inches.

D. All services greater than 100 feet in length shall be minimum 1-inch diameter and sized per the Indiana Plumbing Code.

E. Separate service lines shall be provided for each unit served.

F. Install all service lines in accordance with AWWA C800.

G. Expose the water main (at least a 4-foot by 4-foot hole is required), and provide a safe and dry working area with safe and easy access into and out of the excavation. Brownsburg Water Personnel may, at their discretion, refuse to work in an unsafe hole or trench.

H. Where new meters are installed on opposite sides of road from new mains, push services under road to connect to meters. No open cutting of road surfaces will be allowed for service lines.

I. Excavate trenches to widths which provide adequate working space for proper pipe installation, jointing and embedment.

J. Cut pipe in a neat and workmanlike manner. Use a cutting machine so as to leave smooth ends at right angles to the axis of the pipe. Remove all burs that form as a result of field cutting the pipe, whether the pipe end is beveled or not.

K. No joints will be allowed in service lines.

L. Fusion Bonding Procedure for HDPE Tubing

1. The method of joining polyethylene pipe to polyethylene fitting, other than those shown as flanged or otherwise mechanically connected, shall be by

means of butt-fusion or sidewall fusion in accordance with the polyethylene pipe manufacturer's written bonding procedure specifications (BPS) and conforming to ASME B31.3, Chapter VII, paragraph A-328. BPS shall include, but not be limited to, cutting and facing requirements and shall utilize a data logger, such as the "Datalogger" manufactured by McElroy Manufacturing, Inc., to monitor and record the assembly of each butt-fusion or sidewall fusion joint, except when making small diameter service connections (2-inch or smaller).

2. Materials to be butt-fused or sidewall fused shall be from Standard Code PE 4710 and 445474C cell classification. Mechanical sleeves and saddles will not be allowed for branch or service connections.
3. Fusion bonding equipment specified in the BPS shall be clean and in proper operating condition capable of meeting all conditions and requirements of the pipe and bonding equipment manufacturer, including temperature, alignment and fusion pressure. Equipment heater performance shall be tested and certified prior to use for fusion bonding each day at start up and at one other time each day, no sooner than 4 hours after start up. A data logger for quality control shall electronically log each fusion joint, except as noted above. Logged fusion joints shall be stored in the data logger unit such that it can be downloaded. Logged fusion joints shall be printed weekly and submitted within 2 days of the completion of last fusion joint to the Town for review. One fusion joint for every 5 days of fusing bonding work will be removed and forwarded to a certified lab for testing. Testing shall include bend back tests of the fused joint per AWWA C906.

M. When using HDPE tubing, attach a tracer wire to the pipe at 3-foot intervals and terminate inside the pit. HDPE tubing may only be used between the building and water meter pit.

N. Do not cut or drill meter pits.

O. Allow HDPE pipe to reach ambient temperature for the installed condition before final cutting, installation of concrete restraint system, or connection of transition couplings.

P. The Town will inspect all lines from house and from water main to water meter pit location before meter is set and before Contractor may backfill trench.

3.04 Installation of Meter Pits

A. Follow manufacturer's installation procedures for installation.

B. Contractors are responsible for laying all service lines to meter pit location and setting meter pit.

C. Contractor is responsible for setting meter pit and finished grade of pit. If meter pit must be raised or lowered at a later date it is the installing Contractor's responsibility. No brick or block will be approved. The meter pit must be excavated and reset in order to raise or lower pit.

D. Mark meter pipe and valve boxes with a 4-foot by 4-foot post painted Safety Blue for visibility.

3.05 Installation of Building Meters

A. Any water meter to be installed inside a building must be first approved by the Town.

B. Water meters to be installed inside a building must be equipped with a remote reading device approved by the Town and paid for by the Contractor. The Contractor is responsible for installing the appropriate water meter setters inside the building before the meter is to be set.

3.06 Commercial Domestic Water Taps

A. The Town of Brownsburg will allow domestic water service connections to a commercial building fire main under the following conditions:

1. Domestic water service tap shall be made between the public/private water main and the Post Indicator Valve (P.I.V.) on the fire suppression main. No domestic water taps may be installed between the P.I.V. and the building.
2. Upon completion of work and prior to placing the system in operation, the fire suppression main shall, up to the point of domestic service connection, be sterilized per Section 02675 - Disinfection.

3.07 Field Quality Control

A. Install, flush, and perform leakage test on service lines in accordance with the Indiana Plumbing Code.

B. Conduct continuity test on all tracer wire. All tracer wire found not to be continuous after testing shall be repaired or replaced at no cost to the Town.

PART 4 - FIGURES

4.01 Associated Standard Details

Detail No.	Description
GE-01	General Utility Location Plan & Section
DW-10	Meter Pit Easement
DW-11	Water Service Benching

END OF SECTION 02661

SECTION 02675 - DISINFECTION

PART 1 - GENERAL

1.01 Summary

A. Section Includes: Disinfection of all potable water lines, valves, hydrants, service connections, and all other appurtenances which are to store, handle or carry potable water. Furnish all labor, water, chemical and equipment, including taps, corporation stops, temporary pumps and other items necessary to perform the Work, unless noted otherwise.

B. Related Sections

1. Section 02660 – Water Mains

1.02 References

A. All disinfection work shall be acceptable to the Indiana Department of Environmental Management. If any requirements of this section are in conflict with requirements of the authority of disinfection, those of the authority shall govern.

B. American Water Works Association (AWWA), latest editions

1. AWWA C651 – Disinfecting Water Mains

C. Indiana Plumbing Code

1.03 Submittals

A. Quality Control Submittals

1. Prior to starting any disinfection work, furnish for the Town's review a detailed outline of the proposed sequence of operation, disinfection method to be used, manner of filling and flushing units, source and quality of water to be used, and disposal of heavily chlorinated water.

B. Test Results

1. Submit copies of all bacteriological and chlorine residual test results to the Town.

1.04 Quality Assurance

A. Perform all work for and in connection with disinfection under the direction of an experienced supervisor.

B. All equipment used in disinfection work shall be in proper working condition, and shall be adequate for the specified work.

PART 2 - PRODUCTS

2.01 Materials

A. Liquid chlorine, sodium hypochlorite solution, and calcium hypochlorite granules or tablets, as identified by AWWA as acceptable disinfection materials.

PART 3 - EXECUTION

3.01 Preparation

A. Perform pressure and leakage tests prior to disinfection when specified in related sections.

B. Fill and sterilize all new water mains, services, leads and appurtenances in accordance with AWWA C651 and this section.

C. Each section of water main shall be complete and concrete thrust blocking shall have been in place for not less than 10 days prior to being filled and disinfected.

D. The source of potable water shall be flushed prior to use to ensure that contaminants or debris are not introduced into the new pipes. Flush all water mains and fire hydrants to remove foreign material prior to disinfection. Flush mains with a flushing velocity of at least 2.5 feet per second. Flush water mains and hydrants until the water discharged is clear.

E. Fill the new mains with water from the Utility distribution system. All air shall be expelled from the mains as they are filled. Tap the water main at high points, if necessary, to assure removal of all air. Provide necessary corporation cocks and vent piping in the event that complete venting cannot be accomplished through available outlets.

F. Prevent admission of contaminated water into previously disinfected units.

3.02 Application

A. Disinfection Procedures for Water Mains, Valves, Fittings, and Appurtenances

1. Disinfect by one of the two following methods as described in AWWA C651: tablet or continuous feed. The slug method is not allowed.
   a. Tablet Method
      1) Perform in accordance with AWWA C651.
      2) Do not use calcium hypochlorite on solvent-weld plastic or screwed-joint steel pipe due to the danger of fire or explosion.
      3) Keep pipe and appurtenances clean and dry during construction.
      4) Place calcium hypochlorite granules or tablets to give an average chlorine dose of 25 mg/L as follows:
         a) During construction, place calcium hypochlorite granules at the upstream end of the first section of pipe, at the upstream end of each branch, and at 500-foot intervals.

b) During construction, place 5 gram calcium hypochlorite tables in each section of pipe. Also, place 1 tablet in each hydrant, hydrant branch, and other appurtenances. Attach tablets using a food grade adhesive.

5) After installation is complete, fill the water main slowly and ensure that all air pockets are eliminated.

6) The chlorinated water shall remain in the pipe for at least 24 hours. If the water temperature is less that 41 degrees Fahrenheit, the chlorinated water shall remain in the pipe for at least 48 hours. Operate valves and hydrants during this time to ensure disinfection of appurtenances.

7) At the end of the retention period, the chlorine residual shall not be less than 10 mg/L.

b. Continuous-Feed Method

1) Perform in accordance with AWWA C651.

2) Perform a preliminary flushing of the water main to eliminate air pockets and remove particulates. The flushing velocity shall be not less than 2.5 feet per second.

3) Provide a water supply through a temporary connection from a backflow protected source at a constant, measured rate.

4) Chlorine Solution shall be prepared based on a chlorine gas-water solution or 1 percent chlorine solution prepared with calcium hypochlorite-water or sodium hypochlorite-water mixture.

5) Direct-feed chlorinators, which operate from the gas pressure in the chlorine cylinder, shall not be used for the application of liquid chlorine. Apply liquid chlorine with a solution feed, vacuum operated chlorinator and booster pump.

6) Hypochlorite solutions may be fed using a powered chemical feed pump designed for feeding chlorine solution.

7) At a point not more than 10 feet downstream from the beginning of the new main, feed the new water main with a dose of chlorine at a constant rate such that the feed water will have not less than 25 mg/L free chlorine.

8) Chlorine application shall not cease until the entire main is filled with heavily chlorinated water.

9) The chlorinated water shall remain in the pipe for at least 24 hours.

10) Operate valves and hydrants during this time to ensure disinfection of appurtenances.

11) At the end of the retention period, the chlorine residual shall not be less than 10 mg/L.

2. To prevent damage, the heavily chlorinated water shall be flushed from the system as quickly as possible following the applicable retention period. The piping system shall be flushed until the water is found to be comparable to that of the Utility or not less than 1 mg/L.

3. Do not permit flushing water to discharge into existing water mains.

B. Disinfection of Items to be Immediately Returned to Service

1. Perform in accordance with AWWA C651.

2. Apply liberal quantities of hypochlorite to open trench areas when an existing water main or service connection is opened and the excavation is wet.
3. Disinfect pipe, fittings or appurtenances by thoroughly flushing and swabbing with a 5 percent solution of calcium hypochlorite immediately prior to assembly.
4. Following swabbing, flush the unit until replacement water in the system is proven to be comparable in quality to the water which will enter that unit or system. Flush toward the work location from both directions. Flushing shall be started as soon as the repairs are complete and shall be continued until discolored water is eliminated.
5. After appropriate procedures of disinfection and flushing have been completed, the existing main may be returned to service prior to completion of verification of disinfection in order to minimize the time customers are without water.

C. Disinfection of Service Lines and Accessories

1. Perform in accordance with the Indiana Plumbing Code.
2. Flush the piping with clean, potable water until only potable water appears at the points of outlet.
3. Disinfect the system according to one of the following procedures:
   a. Fill the system with a water – chlorine solution containing at least 50 mg/L of free chlorine. Retain the heavily chlorinated water in the system for at least 24 hours.
   b. Fill the system with a water – chlorine solution containing at least 300 mg/L of free chlorine. Retain the heavily chlorinated water in the system for at least 3 hours.
4. Following disinfection, flush the system with clean, potable water until the chlorine in the water coming from the system does not exceed the chlorine residual in the flushing water.
5. Verification of disinfection for service lines is not required.

3.03 Verification of Disinfection

A. After application of disinfection is complete, perform final flushing of heavily chlorinated water, unless specified otherwise.

B. Before the system, structure or well is placed in service, obtain 2 successive water samples 24 hours apart and have them tested for bacteriological analysis by a State-approved laboratory. Samples shall be drawn in accordance with the State's procedure.

C. If samples do not prove satisfactory, the system, structure or well shall be re-chlorinated and re-sampled until 2 successive water samples taken 24 hours apart have tested satisfactory.

D. Assume the expense of taking and testing additional samples until satisfactory samples are obtained.

E. Assume the expense of all water for subsequent fillings of the pipelines, basins, tanks and equipment.

3.04 Disposal of Waste

A. Properly dispose of all heavily chlorinated water by neutralization and in accordance with the regulations of the local health department, Indiana Department of Environmental Management, and AWWA C651, Appendix C.

B. Obtain written authorization from Town sewer department before discharging heavily chlorinated water to sanitary sewer system.

PART 4 - FIGURES

Not Used.

END OF SECTION 02675

SECTION 02710 - UNDERDRAIN SYSTEMS

PART 1 - GENERAL

1.01 Summary

A. Section Includes: Furnishing and installing all underdrains, French drains, fittings, appurtenances, and other materials as shown on the Drawings and specified herein.

B. Related Sections

1. Section 02220 - Trenching, Backfilling and Compaction for Utilities

1.02 References

A. American Association of State Highway and Transportation Officials (AASHTO), latest editions

1. AASHTO M252 - Standard Specification for Corrugated Polyethylene Drainage Pipe
2. AASHTO M294 - Standard Specification for Corrugated Polyethylene Pipe 300- to 1500-mm (12- to 60-in.) Diameter

B. American Society for Testing and Materials (ASTM), latest editions

1. ASTM C94 - Standard Specification for Ready-Mixed Concrete
2. ASTM D4355 - Standard Test Method for Deterioration of Geotextiles by Exposure to Light, Moisture and Heat in a Xenon Arc Type Apparatus
3. ASTM D4491 - Standard Test Methods for Water Permeability of Geotextiles by Permittivity
4. ASTM D4533 - Standard Test Method for Trapezoid Tearing Strength of Geotextiles
5. ASTM D4632 - Standard Test Method for Grab Breaking Load and Elongation of Geotextiles
6. ASTM D4751 - Standard Test Method for Determining Apparent Opening Size of a Geotextile
7. ASTM D4833 - Standard Test Method for Index Puncture Resistance of Geomembranes and Related Products

C. Indiana Department of Transportation (INDOT) Standard Specifications, latest edition

1. Section 715 - Pipe Culverts, and Storm and Sanitary Sewers
2. Section 904 - Aggregates

1.03 Submittals

A. Product Data

1. Pipe
2. Outlet Protectors
3. Geotextile
4. Concrete Mix Design for Concrete Collars

1.04 Delivery, Storage, and Handling

A. Acceptance at Site

1. Load and unload all pipe, fittings, appurtenances, and other materials in a manner to avoid shock and damage. Do not drop materials. Lift by hoists or skids when hand lifting is not feasible. Never allow pipe handled on skidways to skid or roll against pipe already on the ground.
2. Replace damaged or defective pipe, appurtenances, and other materials at no additional cost.
3. Pipe possessing defects including, but not limited to the following, will be rejected for installation:
   a. Variations from straight centerline
   b. Elliptical shape in round pipe
   c. Lack of rigidity
   d. Illegible markings as required herein
   e. Deep or excessive gouges, dents, bends, or scratches on the pipe wall
   f. Fractures, punctures, or cracks passing through the pipe wall
   g. Damaged or cracked ends where such damage would prevent making a satisfactory joint
4. Geotextile possessing defects including, but not limited to the following, will be rejected for installation:
   a. Rips or punctures passing through the material
   b. Deterioration from light, temperature, or other unsatisfactory conditions

B. Storage and Protection

1. Store materials in an area safe from damage and deterioration.
2. Protect plastic pipes from extreme temperatures and ultraviolet radiation.
3. Keep interior of pipe, fittings, manhole sections, and appurtenances free from dirt and foreign matter.
4. Store gaskets in a cool location out of direct sunlight and free from contact with petroleum products.
5. Store and handle geotextiles in accordance with the manufacturer's recommendations. Do not expose geotextile to direct sunlight, ultraviolet rays, temperatures greater than 140 degrees Fahrenheit, mud, dirt, dust, or debris to the extent that its strength, toughness, or permeability requirements are diminished.
6. Inspect all pipe, geotextile, and appurtenances prior to installation and promptly remove damaged or unsuitable materials. Replace with new and unused materials at no additional cost.

PART 2 - PRODUCTS

2.01 Aggregate Backfill

A. Provide coarse aggregates, class E or higher, in accordance with INDOT Standard Specification Section 904. Furnish aggregates No. 8, No. 5, and No. 2 with gradations in accordance with INDOT Standard Specification Section 904. Furnish washed aggregates where indicated on the standard detail.

B. Where indicated on the standard detail, washed pea gravel fill may be used.

2.02 Underdrain Pipe

A. Provide perforated corrugated polyethylene drainage pipe (PCPP) and fittings in accordance with AASHTO M252 (for 3 to 10-inch diameter) or AASHTO M294 (for 12 to 36-inch diameter).

B. For areas receiving sub-surface drainage only, provide minimum 6-inch diameter underdrain pipe.

C. For areas receiving surface and sub-surface drainage, provide minimum 12-inch diameter underdrain pipe.

2.03 Geotextile

A. Provide non-woven needle punched or heat bonded geotextile consisting of strong, rot resistant, chemically stable long-chain synthetic polymer materials which are dimensionally stable relative to each other. The geotextile plastic yarn or fibers shall consist of at least 85 percent by weight of polyolefins, polyesters, or polyamides, and shall resist deterioration from ultraviolet and heat exposure.

B. Geotextile shall meet or exceed the following requirements:

TEST	METHOD	REQUIREMENTS
Grab Strength	ASTM D4632	80 lb (355.8 N)
Seam Strength (mfrd. & field)	ASTM D4632	70 lb (311.4 N)
Puncture Strength	ASTM D6241	25 lb (111.2 N)
Trapezoid Tear	ASTM D4533	25 lb (111.2 N)
Apparent Opening Size	ASTM D4751	Sieve No. 50 max.
Permeability	ASTM D4491	0.1 mm/sec
Ultraviolet Degradation (150 hrs.)	ASTM D4355	70% strength retained

2.04 Concrete Collar

A. Provide ready-mixed concrete which meets the requirements of ASTM C94. Each cubic yard of concrete shall contain the following:

1. Cement: 6 bag minimum

2. Air content: 5 to 7 percent
3. Coarse aggregate size: 1-1/2 inches maximum
4. Slump: 3 to 5 inches
5. Compressive strength: 4,000 psi

PART 3 - EXECUTION

3.01 General

A. Provide all tools, labor and equipment necessary for the safe and expeditious installation of all underdrains and French drains, risers, and appurtenances as shown on the Drawings and specified herein.

B. Perform all clearing, grubbing, excavation, trenching, bedding, and backfilling required in accordance with Section 02220 - Trenching, Backfilling and Compaction for Utilities.

3.02 Trenching

A. Trenches shall be excavated to the dimensions and grade required by the plans or as directed in the field by the Town.

B. Provide a minimum clearance of 4 inches on each side of the pipe for the width of the trench.

C. Excavate to design grade to provide a smooth, graded surface free of debris, large cavities, and exposed rocks greater than 3 inches in diameter.

3.03 Installation

A. After excavating to design grade, cut geotextile to a width sufficient to provide for non-tight placement in trenches and overlaps of the ends of adjacent rolls.

B. Avoid contamination of the geotextile during construction. If it becomes contaminated, remove and replace geotextile with new material.

C. Place the geotextile with the machine direction in the direction of water flow in the drainage system. It shall be placed loosely, but with no wrinkles or folds.

D. Overlap the ends and edges of subsequent rolls and parallel rolls of geotextile a minimum of 1 foot. The upstream geotextile shall always be overlapped over the downstream geotextile. Join seams which are required in the longitudinal direction by means of either sewing or overlapping. Overlapped seams shall have a minimum overlap equal to the width of the trench.

E. Place perforated pipe with the perforations facing down and securely join the pipe sections with the appropriate coupling, fitting or bands. Non-perforated pipe shall be laid with the bell end upgrade and with open joints wrapped with suitable material to permit entry of water, or unwrapped as shown on the Drawings.

F. Take necessary precautions to protect pipe and tile. All damaged sections shall be replaced by the Contractor for no additional payment.

G. Where required by the Drawings or where directed in the field, furnish and construct stub-tee connections in accordance with INDOT Standard Specification Section 715.

H. Provide cleanout or riser structure at a maximum spacing of 500 feet.

3.04 Backfilling

A. Placement of drainage aggregate shall proceed immediately following placement of the geotextile and underdrain.

B. Place aggregate in a manner which minimizes contamination of the underdrain pipe.

PART 4 - FIGURES

4.01 Associated Standard Details

Detail No.	Description
SW-01	Drainage Swale with Underdrain
SW-02	Underdrain Lateral in Rear of Lot

END OF SECTION 02710

SECTION 02715 - HYBRID DITCH SYSTEMS

PART 1 - GENERAL

1.01 Summary

A. Section Includes: Furnishing and installing all hybrid ditch pipes, drain basins, and appurtenances as shown on the Drawings and as specified herein.

B. Related Sections

1. Section 02220 - Trenching, Backfilling and Compaction for Utilities

1.02 References

A. American Association of State Highway and Transportation Officials (AASHTO), latest editions

1. AASHTO M252 - Standard Specification for Corrugated Polyethylene Drainage Pipe
2. AASHTO M294 - Standard Specification for Corrugated Polyethylene Pipe 300- to 1500-mm (12- to 60-in.) Diameter

B. American Society for Testing and Materials (ASTM), latest editions

1. ASTM D698 - Standard Test Methods for Laboratory Compaction Characteristics of Soil Using Standard Effort (12,400 ft-lbf/ft^3 (600 kN-m/m^3))
2. ASTM D1784 - Standard Specification for Rigid Poly(Vinyl Chloride) (PVC) Compounds and Chlorinated Poly(Vinyl Chloride) (CPVC) Compounds
3. ASTM D3212 - Standard Specification for Joints for Drain and Sewer Plastic Pipes Using Flexible Elastomeric Seals
4. ASTM D3350 - Standard Specification for Polyethylene Plastics Pipe and Fittings Materials
5. ASTM D4355 - Standard Test Method for Deterioration of Geotextiles by Exposure to Light, Moisture and Heat in a Xenon Arc Type Apparatus
6. ASTM D4491 - Standard Test Methods for Water Permeability of Geotextiles by Permittivity
7. ASTM D4533 - Standard Test Method for Trapezoid Tearing Strength of Geotextiles
8. ASTM D4632 - Standard Test Method for Grab Breaking Load and Elongation of Geotextiles
9. ASTM D4751 - Standard Test Method for Determining Apparent Opening Size of a Geotextile
10. ASTM D4833 - Standard Test Method for Index Puncture Resistance of Geomembranes and Related Products
11. ASTM F477 - Standard Specification for Elastomeric Seals (Gaskets) for Joining Plastic Pipe

C. Indiana Department of Transportation (INDOT) Standard Specifications, latest edition

1. Section 904 - Aggregates
2. Section 907 - Concrete, Clay, and Plastic Drainage Components
3. Section 918 - Soil Fabrics

1.03 Submittals

A. Product Data

1. Pipe
2. Structures
3. Castings
4. Geotextile

1.04 Delivery, Storage, and Handling

A. Acceptance at Site

1. Load and unload all pipe, fittings, structure sections, and appurtenances in a manner to avoid shock and damage. Do not drop materials. Lift by hoists or skids when hand lifting is not feasible. Never allow pipe handled on skidways to skid or roll against pipe already on the ground.
2. Replace damaged or defective pipe and appurtenances at no additional cost.
3. Pipe possessing defects including, but not limited to the following, will be rejected for installation:
   a. Variations from straight centerline
   b. Elliptical shape in round pipe
   c. Lack of rigidity
   d. Illegible markings as required herein
   e. Deep or excessive gouges, dents, bends, or scratches on the pipe wall
   f. Fractures, punctures, or cracks passing through the pipe wall
   g. Damaged or cracked ends where such damage would prevent making a satisfactory joint
4. Geotextile possessing defects including, but not limited to the following, will be rejected for installation:
   a. Rips or punctures passing through the material
   b. Deterioration from light, temperature, or other unsatisfactory conditions

B. Storage and Protection

1. Store materials in an area safe from damage and deterioration.
2. Protect plastic pipes from extreme temperatures and ultraviolet radiation.
3. Keep interior of pipe, fittings, manhole sections, and appurtenances free from dirt and foreign matter.
4. Store gaskets in a cool location out of direct sunlight and free from contact with petroleum products.
5. Store and handle geotextiles in accordance with the manufacturer's recommendations. Do not expose geotextile to direct sunlight, ultraviolet

rays, temperatures greater than 140 degrees Fahrenheit, mud, dirt, dust, or debris to the extent that its strength, toughness, or permeability requirements are diminished.

6. Inspect all pipe, structures, geotextile, and appurtenances prior to installation and promptly remove damaged or unsuitable materials. Replace with new and unused materials at no additional cost.

PART 2 - PRODUCTS

2.01 Aggregate Backfill

A. Provide washed coarse aggregate No. 8, class E or higher, in accordance with INDOT Standard Specification Section 904.

B. Provide fine aggregate No. 23 sand, in accordance with INDOT Standard Specification Section 904.

2.02 High Density Polyethylene (HDPE) Pipe

A. Pipe Material

1. Provide dual wall corrugated HDPE pipe and fittings, consisting of an annular outer corrugated pipe wall and a smooth inner wall, in accordance with ASTM F2648 and INDOT Standard Specification Section 907.
2. Provide perforated corrugated polyethylene drainage pipe (PCPP) and fittings in accordance with AASHTO M252 (for 3- to 10-inch diameter) or AASHTO M294 (for 12- to 36-inch diameter), ASTM F2648, and INDOT Standard Specification Section 907. Perforations shall be AASHTO Class II.
3. HDPE pipe and fittings material shall be either:
   a. Virgin high density polyethylene with a minimum cell class of 424420C for 4- to 10-inch diameter pipe or 435400C for 12- to 36-inch diameter, as defined in ASTM D3350
   b. Engineered compound of virgin and recycled high density polyethylene with a minimum cell class of 424420C for 4- to 10-inch diameter pipe or 435420C for 12- to 36-inch diameter, as defined in ASTM D3350
4. The flexibility factor of HDPE pipe shall not exceed 0.095.

B. Joints

1. Furnish HDPE pipe with bell and spigot joints in conformance with ASTM F2648.
2. Gasket material shall conform to ASTM F477.

C. Fittings

1. Provide fittings of the same manufacturer for each type of HDPE pipe.
2. Manufactured fittings such as wyes, tees, elbows, or adaptors will not be accepted for use in place of drain basins unless otherwise indicated on the Drawings.

D. Pipe Markings

1. Each length of HDPE pipe shall be clearly marked with the following information at a minimum:
   a. Name of manufacturer or identification symbol
   b. Nominal pipe size
   c. Product/extrusion code

2.03 Pipe Accessories

A. Pipe to Structure Connections

1. Pipe penetration holes shall be either pre-formed by manufacturer or core drilled in the field.
2. Provide flexible neoprene molded boot or resilient seal which conforms to ASTM C923. Provide Kor-N-Seal boot as manufactured by National Pollution Control Systems, Inc. or approved equal. Provide resilient seal as manufactured by A-Lok or approved equal.

2.04 Drain Basins and Accessories

A. Structures

1. Provide PVC drain basins which are manufactured from PVC pipe stock, utilizing a thermo-molding process to re-form the pipe stock to the furnished configuration. Drainage pipe connection stubs shall be manufactured from PVC pipe stock and formed to provide a watertight connection with the specified type of pipe. The raw material shall conform to ASTM D1784 cell class 12454.
2. PVC structure joints shall conform to ASTM D3212. Flexible elastomeric seals shall conform to ASTM F477.
3. Provide Nyloplast drain basins as manufactured by Advanced Drainage Systems, Inc. or approved equal.

B. Castings

1. Furnish cast iron or ductile iron frames and covers to match the diameter of the drain basin installed. Road and highway grates shall meet minimum H-20 load rating.

2.05 Geotextile

A. Provide non-woven needle punched or heat bonded geotextile consisting of strong, rot-resistant, chemically stable long-chain synthetic polymer materials which are dimensionally stable relative to each other including selvedges.

B. Furnish geotextile which meets or exceeds INDOT Standard Specification Section 918 and the following requirements:

TEST	*METHOD*	*REQUIREMENT*
Grab Strength	ASTM D4632	80 lb (355.8 N)
Seam Strength (mfrd. & field)	ASTM D4632	70 lb (311.4 N)
Puncture Strength	ASTM D4833	25 lb (111.2 N)
Trapezoid Tear	ASTM D4533	25 lb (111.2 N)
Apparent Opening Size	ASTM D4751	Sieve No. 50 max.
Permeability	ASTM D4491	0.1 mm/sec
Ultraviolet Degradation (150 hrs.)	ASTM D4355	70% strength retained

PART 3 - EXECUTION

3.01 Examination

A. Verification of Conditions

1. Before installing piping, verify location, depth, type of joint needed, and size of pipe to which connection is proposed.
2. Assure that lines can be run as proposed. Notify Town immediately for approval of any necessary deviation before lines are run.
3. Work all lengths of pipe into place without forcing.

3.02 Installation

A. General

1. Provide all tools, labor and equipment necessary for the safe and expeditious installation of all hybrid ditches, drain basins, and appurtenances as shown on the Drawings and specified herein.
2. Perform all clearing, grubbing, excavation, trenching, bedding, and backfilling required in accordance with Section 02220 - Trenching, Backfilling and Compaction for Utilities.

B. Bedding and Backfill

1. Place aggregate in a manner which minimizes contamination of the hybrid ditch pipe.
2. Place coarse aggregate bedding and backfill material in 6 to 8-inch balanced lifts to ensure proper compaction and filling of all voids. Hand tamp or "walk" aggregate into place.
3. Place fine aggregate backfill material in maximum 12-inch balanced lifts to ensure proper compaction. Compact each lift to 95 percent of Standard Proctor dry density in accordance with ASTM D698.

C. Pipe and Accessories

1. Lay hybrid ditch pipe uniformly to line and grade so that finished pipe will present a uniform conduit.
2. Set line and grade by means of laser beam and target for alignment and grade.
3. Lay pipe progressively upgrade in a manner to form close, concentric joints with smooth bottom inverts.
4. Maintain 18 inches of vertical separation and 10 feet of horizontal separation between new hybrid ditch pipe and new or existing water mains unless otherwise directed. Notify Town immediately of all instances where separation cannot be maintained.
5. After joint is made, place sufficient bedding material along each side of the pipe to prevent conditions that might tend to move the pipe off line or grade.
6. Temporarily plug installed piping systems at end of each day's work or other interruption of progress on a given line. Plug shall be adequate to prevent entry of animals and entrance or insertion of deleterious materials and shall be installed in a manner satisfactory to the Town.
7. Securely attach fabricated branches for wyes and tees to wall of pipe in such a manner as to not restrict or otherwise interfere with flow characteristics of the pipe.
8. Install boot and saddle connectors for all taps to concrete and RCP pipe.
9. Ensure smooth trench bottom free from large exposed rocks greater than 3 inches in diameter, and cover trench bottom with geotextile as specified herein and No. 8 washed gravel. Install pipe with perforations facing downward at a minimum grade of 0.10 percent and 2 feet minimum to 4 feet maximum cover. Cover PCPP with No. 8 washed gravel to a minimum of 12 inches above the pipe crown. Fold geotextile around gravel and backfill as specified and as shown on the Drawings.
10. If any existing drainage tile systems are encountered during construction, reconstruct the tile to its original conditions or connect tile to the new storm drainage system as approved by the Town.

D. Drain Basins and Accessories

1. Join pipe bell spigot to the structure body by use of a swage mechanical joint.
2. Bed and backfill drain basins as specified for PVC pipe in Section 02200 - Trenching, Backfilling and Compaction for Utilities.
3. Install drain basins so axis of structure is vertical.
4. Unless otherwise indicated, set castings for all structures at finish grade level. Inline drain and drain basin bodies shall be cut to final grade. No brick, stone, or concrete block will be permitted to set the casting to the finish grade level. Adjust castings to the satisfaction of the Town, at Contractor's expense.
5. For H-20 load rate installations, pour a concrete ring under and around the grate and frame per the manufacturer's recommendations.
6. Remove all debris and excess soil from structures after installation and prior to flushing the storm sewer pipes, to the satisfaction of the Town.

E. Connection to Existing Structures

1. Core drill new pipe penetration at the proper location where the pipe enters the structure.
2. Install flexible neoprene molded boot or resilient seal to secure the pipe in the structure wall as noted in Article 2.03A.2 of this Section.

3.03 Field Quality Control

A. Tests

1. Deflection Test for Flexible Pipes
   a. Pipe materials considered flexible include the following:
      1) HDPE
      2) PCPP
   b. Perform testing in presence of Town.
   c. Perform deflection testing on all flexible pipes after the final backfill has been in place for at least 30 days.
   d. Perform deflection test using a mandrel pulled by hand. The mandrel (go/no-go) device shall be cylindrical in shape and constructed with 9 or 10 evenly spaced arms or prongs.
   e. No pipe shall exceed a vertical deflection of 5 percent. Uncover, replace, and retest any pipe not passing the deflection test until a satisfactory result is achieved.

B. Inspection

1. Television Inspection
   a. Televise all pipe segments in excess of 40 feet in length.
   b. Perform all television inspection in presence of Town.
   c. Clean all new pipe segments by “flooding” prior to television inspection. The image shall be clear so the interior condition of the pipe is easily evaluated.
   d. Correct all unacceptable conditions found during the television inspection and re-televise until no unacceptable conditions are found.
   e. Unacceptable conditions are conditions that adversely affect the ability of the system to function as designed or to be properly maintained and may include, but are not limited to, the following:
      1) Protruding taps
      2) Cracked or faulty pipe
      3) Misaligned or deformed pipe
      4) Debris in line
      5) Excessive gaps at joints
      6) Bellies or sags with a depth greater than or equal to 10 percent of the pipe diameter (maximum of 3 inches) or a length greater than 25 feet
   f. Submit copy of the televising recording (DVD format) within 14 calendar days of the inspection.

3.04 Cleaning

A. Clean all new pipe segments with high pressure water jet after installation and before testing.

PART 4 - FIGURES

4.01 Associated Standard Details

Detail No.	Description
SW-04	Hybrid Ditch Trench
SW-05	Modified Hybrid Ditch Trench
SW-06	Hybrid Ditch Trench at Inlet
SW-07	Hybrid Ditch Trench Profile

END OF SECTION 02715

SECTION 02720 - STORM SEWER SYSTEMS

PART 1 - GENERAL

1.01 Summary

A. Section Includes: Furnishing and installing all culverts, storm sewers, end sections, inlets, manholes, and appurtenances as shown on the Drawings and as specified herein.

B. Related Sections

1. Section 02101 - Erosion and Sediment Control and Stormwater Pollution Prevention
2. Section 02220 - Trenching, Backfilling and Compaction for Utilities

1.02 References

A. American Association of State Highway and Transportation Officials (AASHTO), latest editions

1. AASHTO M36 - Standard Specification for Corrugated Steel Pipe, Metallic-Coated for Sewers and Drains
2. AASHTO M170 - Standard Specification for Reinforced Concrete Culvert, Storm Drain, and Sewer Pipe
3. AASHTO M207 - Standard Specification for Reinforced Concrete Elliptical Culvert, Storm Drain, and Sewer Pipe

B. American Society for Testing and Materials (ASTM), latest editions

1. ASTM A48 - Standard Specification for Gray Iron Castings
2. ASTM A615 - Standard Specification for Deformed and Plain Carbon-Steel Bars for Concrete Reinforcement
3. ASTM C76 - Standard Specification for Reinforced Concrete Culvert, Storm Drain, and Sewer Pipe
4. ASTM C443 - Standard Specification for Joints for Concrete Pipe and Manholes, Using Rubber Gaskets
5. ASTM C478 - Standard Specification for Precast Reinforced Concrete Manhole Sections
6. ASTM C507 - Standard Specification for Reinforced Concrete Elliptical Culvert, Storm Drain, and Sewer Pipe
7. ASTM C928 - Standard Specification for Packaged, Dry, Rapid-Hardening Cementitious Materials for Concrete Repairs
8. ASTM C1433 - Standard Specification for Precast Reinforced Concrete Monolithic Box Sections for Culverts, Storm Drains, and Sewers
9. ASTM C1577 - Standard Specification for Precast Reinforced Concrete Monolithic Box Sections for Culverts, Storm Drains, and Sewers Design According to AASHTO LRFD

10. ASTM D1784 - Standard Specification for Rigid Poly(Vinyl Chloride) (PVC) Compounds and Chlorinated Poly(Vinyl Chloride) (CPVC) Compounds
11. ASTM D2412 - Standard Test Method for Determination of External Loading Characteristics of Plastic Pipe by Parallel-Plate Loading
12. ASTM D3034 - Standard Specification for Type PSM Poly(Vinyl Chloride) (PVC) Sewer Pipe and Fittings
13. ASTM D3212 - Standard Specification for Joints for Drain and Sewer Plastic Pipes Using Flexible Elastomeric Seals
14. ASTM D3350 - Standard Specification for Polyethylene Plastics Pipe and Fittings Materials
15. ASTM D4101 - Standard Specification for Polypropylene Injection and Extrusion Materials
16. ASTM F477 - Standard Specification for Elastomeric Seals (Gaskets) for Joining Plastic Pipe
17. ASTM F679 - Standard Specification for Poly(Vinyl Chloride) (PVC) Large-Diameter Plastic Gravity Sewer Pipe and Fittings
18. ASTM F714 - Standard Specification for Polyethylene (PE) Plastic Pipe (SDR-PR) Based on Outside Diameter
19. ASTM F894 - Standard Specification for Polyethylene (PE) Large Diameter Profile Wall Sewer and Drain Pipe
20. ASTM F949 - Standard Specification for Poly(Vinyl Chloride) (PVC) Corrugated Sewer Pipe With a Smooth Interior and Fittings
21. ASTM F1055 - Standard Specification for Electrofusion Type Polyethylene Fittings for Outside Diameter Controlled Polyethylene and Crosslinked Polyethylene (PEX) Pipe and Tubing
22. ASTM F1803 - Standard Specification for Poly(Vinyl Chloride) (PVC) Closed Profile Gravity Pipe and Fittings Based on Controlled Inside Diameter
23. ASTM F2648 - Standard Specification for 2 to 60 inch [50 to 1500 mm] Annular Corrugated Profile Wall Polyethylene (PE) Pipe and Fittings for Land Drainage Applications

C. Indiana Department of Transportation (INDOT) Standard Specifications, latest edition

1. Section 901 - PCC Materials
2. Section 904 - Aggregates
3. Section 907 - Concrete, Clay, and Plastic Drainage Components
4. Section 908 - Metal Pipe
5. Section 910 - Metal Materials

1.03 Submittals

A. Product Data, as applicable

1. Pipe
2. Fittings
3. End Sections
4. Trash Guards
5. Structures
6. Castings

7. Manhole Steps

1.04 Delivery, Storage, and Handling

A. Acceptance at Site

1. Load and unload all pipe, fittings, structure sections, and appurtenances in a manner to avoid shock and damage. Do not drop materials. Lift by hoists or skids when hand lifting is not feasible. Never allow pipe handled on skidways to skid or roll against pipe already on the ground.
2. Replace damaged or defective pipe and appurtenances at no additional cost.
3. Pipe possessing defects including, but not limited to the following, will be rejected for installation:
   a. Variations from straight centerline
   b. Elliptical shape in round pipe
   c. Lack of rigidity
   d. Illegible markings as required herein
   e. Bruised, broken, or otherwise damaged metallic or bituminous coating or liner, as applicable
   f. Deep or excessive gouges, dents, bends, or scratches on the pipe wall
   g. Fractures, punctures, or cracks passing through the pipe wall
   h. Damaged or cracked ends where such damage would prevent making a satisfactory joint
4. Concrete pipe and structures possessing defects including, but not limited to the following, will be rejected for installation:
   a. Fractures or cracks passing through the wall
   b. Honeycombed or open texture which would adversely affect the function of the box sections
   c. Ends of sections are not normal to the walls and centerline of the section
5. Geotextile possessing defects including, but not limited to the following, will be rejected for installation:
   a. Rips or punctures passing through the material
   b. Deterioration from light, temperature, or other unsatisfactory conditions

B. Storage and Protection

1. Store materials in an area safe from damage and deterioration.
2. Protect plastic pipes from extreme temperatures and ultraviolet radiation.
3. Keep interior of pipe, fittings, manhole sections, and appurtenances free from dirt and foreign matter.
4. Store gaskets in a cool location out of direct sunlight and free from contact with petroleum products.
5. Inspect all pipe, structures, and appurtenances prior to installation and promptly remove damaged or unsuitable materials. Replace with new and unused materials.

PART 2 - PRODUCTS

2.01 High Density Polyethylene (HDPE) Pipe

A. Pipe Material

1. Provide HDPE pipe for culverts and storm sewers which are 12 to 24 inches in diameter. HDPE pipe shall not be used for culverts and storm sewers over 24 inches in diameter.
2. Provide dual wall corrugated HDPE pipe and fittings, consisting of an annular outer corrugated pipe wall and a smooth inner wall, in accordance with ASTM F2648 and INDOT Standard Specification Section 907.
3. HDPE pipe and fittings material shall be either:
   a. Virgin high density polyethylene with a minimum cell class of 435400C, as defined in ASTM D3350
   b. Engineered compound of virgin and recycled high density polyethylene with a minimum cell class of 435420C, as defined in ASTM D3350
4. The flexibility factor of HDPE pipe shall not exceed 0.095.

B. Joints

1. Furnish HDPE pipe with bell and spigot joints in conformance with ASTM F2648.
2. Gasket material shall conform to ASTM F477.

C. Fittings

1. Provide fittings of the same manufacturer for each type of HDPE pipe.
2. Manufactured fittings such as wyes, tees, elbows, or adaptors will not be accepted for use in place of storm sewer manholes or inlets, unless otherwise indicated on the Drawings.

D. Pipe Markings

1. Each length of HDPE pipe shall be clearly marked with the following information at a minimum:
   a. Name of manufacturer or identification symbol
   b. Nominal pipe size
   c. Product/extrusion code

2.02 Polypropylene Pipe (PP)

A. Pipe Material

1. Provide PP for storm sewers which are 12 to 60 inches in diameter. PP shall not be used for storm sewers over 60 inches in diameter.
2. Provide double wall polypropylene pipe with a smooth interior and annular exterior corrugations in accordance with ASTM F2736 (12 to 24-inch diameter).

3. Provide triple wall polypropylene pipe with a smooth interior and exterior surface in accordance with ASTM F2764 (30 to 60-inch diameter).
4. Pipe shall have minimum stiffness of 46 psi when tested in accordance with ASTM D2412.

B. Joints

1. Furnish PP with a gasketed integral bell and spigot joints meeting the requirements of ASTM F2736 (12 to 24-inch diameter) and ASTM F2764 (30 to 60-inch diameter).

C. Fittings

1. Provide fittings which conform to ASTM F2736 (12 to 24-inch diameter) and ASTM F2764 (30 to 60-inch diameter).
2. Securely attach fabricated branches for wyes and tees to the wall of the pipe in a watertight manner and flush with the inside surface of the pipe.

D. Pipe Markings

1. Each length of PP shall be clearly marked with the following information at a minimum:
   a. Name of manufacturer or identification symbol
   b. Nominal pipe size
   c. Product/extrusion code

2.03 Polyvinyl Chloride (PVC) Pipe

A. Pipe Material

1. Provide PVC pipe for culverts and storm sewers which are 12 to 36 inches in diameter. PVC pipe shall not be used for culverts and storm sewers over 36 inches in diameter.
2. Provide solid wall gravity flow PVC storm sewer pipe and fittings with bell and spigot joints with elastomeric seals and smooth inner walls in accordance with ASTM D3034 (12 to 15-inch diameter), ASTM F679 (18 to 36-inch diameter), and INDOT Standard Specification Section 907.
3. Provide PVC pipe with a minimum cell class of 12364 for 12 to 15-inch diameter pipes. Provide PVC pipe with a minimum cell class of 12454 for 18 to 36-inch diameter pipes. Cell class properties shall be in accordance with ASTM D1784.
4. PVC pipe shall have a minimum pipe stiffness of 46 psi in accordance with ASTM D2412.

B. Joints

1. Furnish PVC pipe with flexible, gasketed compression type joints so that, when assembled, the gasket inside the bell is compressed radially on the pipe spigot to form a soil-tight seal. Assemble joints in accordance with the pipe manufacturer's recommendations and ASTM D3212.

2. The gasket shall conform to ASTM F477.

C. Fittings

1. Manufactured fittings such as wyes, tees, elbows, or adaptors will not be accepted for use in place of storm sewer manholes, inlets, or drain basins unless otherwise indicated on the Drawings.

D. Pipe Markings

1. Each length of PVC pipe shall be clearly marked with the following information at a minimum:
   a. Name of manufacturer or identification symbol
   b. Trade name or trademark
   c. Nominal pipe size
   d. Production/extrusion code
   e. Material and cell class designation
   f. ASTM designation

2.04 Reinforced Concrete Box

A. Material

1. Provide reinforced concrete box structure sections in accordance with ASTM C1577 and INDOT Standard Specification Section 907.
2. Furnish reinforced concrete box sections manufactured from a homogeneous concrete mixture in accordance with the test and design requirements of ASTM C1433. Box sections shall be cured in such a manner that the specified compressive strength of the concrete is achieved in 28 days or less.
3. Provide precast concrete sections with no more than 4 holes cast or drilled in the section for handling or laying.
4. Provide rapid setting patch material in accordance with ASTM C928 and INDOT Standard Specification Section 901 or precast concrete plugs for filling all holes used for handling.

B. Joints

1. Furnish reinforced concrete box sections with male and female ends designed to allow box sections to be laid together in a continuous line.
2. Provide joint membrane systems in accordance with INDOT Standard Specification Section 907.

C. Steel Reinforcement

1. The minimum cover of concrete over steel reinforcement shall be 1 inch.
2. The inside steel reinforcement shall extend into the male portion of the joint. The outside steel reinforcement shall extend into the female portion of the joint.
3. The clear distance of the end reinforcement steel must be greater than 1/2 inch but less than 2 inches from the end of the box section.

D. Structure Markings

1. Each reinforced concrete box section shall be clearly marked with the following information at a minimum:
   a. Box section span and rise
   b. ASTM table number
   c. Maximum and minimum design earth cover
   d. Specification designation
   e. Date of manufacture
   f. Name or trademark of manufacturer
   g. Orientation of top of structure

2.05 Reinforced Concrete Pipe (RCP)

A. Pipe Material

1. Provide RCP for culverts and storm sewers which are 12 inches in diameter or larger.
2. Provide Class III, Wall B type RCP which conforms to ASTM C76, AASHTO M170, and INDOT Standard Specification Section 907.
3. Provide elliptical RCP which conforms to ASTM C507, AASHTO M207, and INDOT Standard Specification Section 907.
4. Lift holes are not permitted for pipes less than 36-inch diameter. A maximum of 2 lift holes will be permitted for pipes 36-inch diameter and larger.

B. Joints

1. Furnish RCP with tongue and groove joints with compression type rubber gasket which conforms to ASTM C443.

C. Fittings

1. Supply fabricated wye and tee branches.

D. Pipe Markings

1. Each length of RCP shall be clearly marked with the following information at a minimum:
   a. Nominal pipe size
   b. Date of manufacture
   c. Name or trademark of manufacturer

2.06 Pipe Accessories

A. Metal End Sections

1. Provide metal end sections in accordance with AASHTO M36 and INDOT Standard Specification Section 908.

2. Furnish trash guard for all end sections which are 18 inches in diameter and larger. Trash guards shall have a maximum clear opening of 6 inches and be removable.

B. Concrete End Sections

1. Provide concrete end sections in accordance with INDOT Standard Specification Section 907.
2. Concrete end sections shall be the same grade and strength as specified for RCP, ASTM C76, Class III.
3. Reinforcement in the non-tapered portion of the end section shall be the same as specified for RCP, ASTM C76, Class III for the size of connecting pipe.
4. Reinforcement in the tapered portion of the end section shall have a cross sectional area equal to that of one layer of steel in the non-tapered portion.
5. Provide concrete pipe toe anchors on all concrete end sections.
6. Furnish 3/4-inch coarse thread hook bolts and nuts in accordance with ASTM A307. Hook bolts and nuts shall be galvanized in accordance with ASTM A153.
7. Furnish trash guard for all end sections which are 18 inches in diameter and larger. Trash guards shall have a maximum clear opening of 6 inches and be removable.

C. Outfall Protection

1. Provide hard armoring material as required for outfall protection. Refer to Section 02101 - Erosion and Sediment Control and Stormwater Pollution Prevention.

2.07 Precast Concrete Manholes, Inlets, and Accessories

A. General

1. Provide precast concrete sections with no more than 3 holes cast or drilled in the section for handling.
2. Provide rapid setting patch material in accordance with ASTM C928 and INDOT Standard Specification Section 901 or precast concrete plugs for filling all holes used for handling.

B. Precast Concrete Manholes

1. Supply a minimum of 1 adjusting ring for each manhole. Adjusting rings shall be a minimum of 4 inches and maximum of 12 inches in height. Supply precast concrete riser sections for adjustment greater than 12 inches in height.
2. Provide precast concrete eccentric cone section which conforms to ASTM C478. Where indicated on the Drawings, provide flat top section which conforms to ASTM C478. Cone and flat top sections shall have a 24-inch opening.

3. Provide precast concrete manhole risers/barrels which conform to ASTM C478, AASHTO M199, INDOT Standard Specification Section 907, and as indicated on Drawings.
4. Provide precast concrete manhole bases which conforms to ASTM C478, AASHTO M199, and INDOT Standard Specification Section 907.
5. Provide precast concrete floor or form with Class A concrete. Floor shall be sloped to the sewer invert.
6. Provide 2 rows of 1/2-inch diameter flexible butyl rubber joint gaskets conforming to ASTM C443 and AASHTO M198 for all manhole section joints. Provide Kent seal or approved equal.
7. Sumps are not permitted in manhole structures.

C. Precast Concrete Inlets

1. Provide precast concrete inlets to the dimensions as shown on the Drawings.
2. Provide RCP Class II, Wall B for yard inlet structures.
3. Sumps are not permitted in inlet structures.

D. Castings

1. Provide cast iron frames and covers in accordance with ASTM A48 Class 35B and INDOT Standard Specification Section 910.
2. Supply all frames and covers from one manufacturer.
3. Furnish frames and covers which are rated for traffic, of non-rocking design, and have machined horizontal and vertical bearing surfaces.
4. Provide manhole frame and cover as shown in casting schedule below, or approved equal. Storm manhole solid covers shall have non-penetrating pick holes. Storm manhole solid covers shall have the words “STORM SEWER” cast in recessed letters 2 inches in height. Storm manhole grate castings shall have a pollution prevention message as described in Article 2.08D.6 of this Section.
5. Provide inlet casting as shown in casting schedule below, or approved equal. Inlet castings shall have message pollution prevention message as described in Article 2.08D.6 of this Section.
6. Furnish new stormwater grate castings with a pollution prevention message and icon which are permanently attached or cast directly into the casting. The casting shall have the message “DUMP NO WASTE <fish icon> DRAINS TO WATERWAY” in minimum 1 inch high letters.

7. Storm Structure Casting Schedule:

Structure Type	*Casting Type*	*Neenah Model*	*EJIW Model*
Manhole	Solid Cover	R-1642	1045-A
Manhole	Flat Grate	R-2501-G	1045-M2
Inlet	Chair Back Curb & Gutter	R-3286-8V	7520-M2-T1
Inlet	Roll Curb & Gutter	R-3501-TR R-3501-TL	7495-M1 7495-M2
Inlet	Flat Grate (open pavement areas)	R-3402-E	n/a
Yard Inlet	Beehive Grate	R-2510-A	1140-02

E. Steps

1. Provide steps in all structures 4 feet deep or greater in accordance with AASHTO M199 and INDOT Standard Specification Section 907.
2. Provide steps with a minimum 10 inches of clear step width.
3. Furnish copolymer polypropylene coated steel steps or approved non-corrosive fiberglass steps.
4. Copolymer polypropylene shall meet the requirements of ASTM D4101 reinforced with deformed 1/2-inch minimum diameter reinforcing steel in accordance with ASTM A615, Grade 60.
5. Non-coated cast iron steps will not be accepted.
6. Provide steps as manufactured by M.A. Industries, Inc., American Step Company, Inc., or approved equal.

F. Pipe to Structure Connections

1. Pipe penetration holes shall be either pre-formed by manufacturer or core drilled in the field.
2. For RCP, provide non-shrink grout mixture of 2 parts No. 23 fine aggregate in accordance with INDOT Standard Specification Section 904 and 1 part Portland cement.
3. For HDPE, PP, and PVC pipe, provide flexible neoprene molded boot or resilient seal which conforms to ASTM C923. Provide Kor-N-Seal boot as manufactured by National Pollution Control Systems, Inc. or approved equal. Provide resilient seal as manufactured by A-Lok or approved equal.

PART 3 - EXECUTION

3.01 General

A. Inspect pipe, fittings, structures, and appurtenances prior to installation and promptly remove damaged or unsuitable materials from the job site. Replace damaged or unsuitable materials with new and unused materials.

B. Install all pipes, fittings, structures, and appurtenances as shown on the standard details and as specified in this Section. Do not install pipe when, in the opinion of the Town, trench conditions are unsuitable.

C. Follow manufacturer's installation procedures when installing pipe, fittings, structures, and appurtenances.

3.02 Examination

A. Verification of Conditions

1. Before installing piping, verify location, depth, type of joint needed, and size of pipe to which connection is proposed.
2. Assure that lines can be run as proposed. Notify Town immediately for approval of any necessary deviation before lines are run.
3. Work all lengths of pipe into place without forcing.

3.03 Installation

A. Culvert Pipe, Storm Sewer Pipe, and Accessories

1. Maintain 18 inches of vertical separation and 10 feet of horizontal separation between new storm sewer and new or existing water mains unless otherwise directed. Notify Town immediately of all instances where separation cannot be maintained.
2. Lay culvert pipe and storm sewer pipe uniformly to line and grade so that finished culvert or storm sewer will present a uniform conduit.
3. Minimum allowable cover shall be 24 inches over the top of culvert and storm sewer pipes in all locations. Shallower depth of cover may be considered by the Town under conditions where engineering design will alleviate concern for surface loadings and frost heave.
4. Set line and grade by means of laser beam and target for alignment and grade.
5. Lay culvert pipe and storm sewer pipe progressively upgrade in a manner to form close, concentric joints with smooth bottom inverts.
6. After joint is made, place sufficient bedding material along each side of the pipe to prevent conditions that might tend to move the pipe off line or grade.
7. Repair any lift holes in a clean, workmanlike manner using a conical shaped precast concrete plug. Properly seal into place using non-shrink cement grout. Mastic sealer shall not be used.
8. Temporarily plug installed piping systems at end of each day’s work or other interruption of progress on a given line. Plug shall be adequate to prevent entry of animals and entrance or insertion of deleterious materials and shall be installed in a manner satisfactory to the Town.
9. Securely attach fabricated branches for wyes and tees to wall of pipe in such a manner as to not restrict or otherwise interfere with flow characteristics of the pipe.
10. Install boot and saddle connectors for all taps to concrete and RCP pipe.

11. Complete all field-cutting of PVC pipe in a neat, trim manner using a hand or power saw. Field cutting of closed profile pipe requires any exposed channels be sealed in accordance with the manufacturer's recommendation.
12. Place the end of the connecting pipe in the concrete end section so that flow lines are flush. Fill the joint completely with mortar.
13. Transition from the specified fill slope to the slope of the end section to create a smooth transition approximately 10 feet in length.
14. Install trash guards on all pipe end sections 18 inches and larger in diameter.
15. If any existing drainage tile systems are encountered during construction, reconstruct the tile to its original conditions or connect tile to the new storm drainage system as approved by the Town.

B. Precast Concrete Manholes, Inlets, and Accessories

1. Install storm structures to provide a maximum structure spacing of 500 feet.
2. For new storm sewer construction, install storm manhole at locations where there is a change in storm sewer alignment, slope, size, or material.
3. Unless otherwise indicated, provide 0.1 foot sewer invert drop through manholes.
4. Keep structure excavations free from water during construction.
5. Fill all areas excavated below the depth required for the structure's base with No. 8 crushed stone at Contractor's expense.
6. Install precast concrete risers and adjusting rings in such combination that the manhole frame will be at the proper elevation. Structures shall be completely constructed to proper finished grade before curbs, asphalt, or other pavement may be installed. Patching and filling under frames will not be permitted.
7. Install manhole frame to grade and centered.
8. Install steps beginning at approximately 8 inches below the top of the cone section (maximum 21 inches from top of casting). Install steps at 12 inches on center minimum to 16 inches on center maximum, continuous and spaced uniformly.
9. Install steps with minimum 3-inch wall embedment and minimum 4-inch clear distance projection from the wall as measured from the point of embedment.
10. Install precast concrete base, risers, cone, and flat top sections so that the axis of the manhole is vertical.
11. Install precast concrete inlets so that the axis of the structure is vertical.
12. Install gaskets for joints in accordance with the manufacturer's recommendations. Wrap riser joints with external joint seals in accordance with manufacturer's recommendations. Install external seal from 6 inches above joint to 6 inches below.
13. Prior to backfilling, fill all holes used for handling with rapid setting patch material or with precast concrete plugs secured with Portland cement mortar.
14. Unless otherwise indicated, set castings for all structures at finish grade level. Adjust castings to the satisfaction of the Town, at Contractor's expense.
15. No mortar or grout may be installed inside manhole, except for sealing annular space around pipe penetrations.
16. Storm sewer structures and castings must be inspected by the Town. Proper casting elevation will be verified. Adjustment and repairs shall be made prior to maintenance and final bond releases.

C. Pipe to Structure Connections

1. Core drill new pipe penetration into existing structure at the proper location where the pipe enters the structure.
2. For concrete pipe and RCP, fill the annular space between the pipe and structure interior and exterior walls with grout as noted in Article 2.08F.2 of this Section.
3. For HDPE and PVC pipe, install flexible neoprene molded boot or resilient seal to secure the pipe in the structure wall as noted in Article 2.08F.3 of this Section.

D. Connection to Existing Sewer

1. Install new service connection to existing storm sewer as shown and as specified for new service connections to existing sanitary sewers.

3.04 Field Quality Control

A. General

1. Provide all necessary equipment and instrumentation required for proper completion of the testing of manholes and piping systems.
2. All tests shall be made in the presence of the Town. Preliminary tests made by the Contractor without being observed by the Town will not be accepted. Notify the Town at least 36 hours (not including holidays or weekends) before any work is to be inspected or tested.
3. All defects in piping systems shall be repaired and/or replaced and retested until acceptable to the Town. Repairs shall be made to the standard of quality specified for the entire system.
4. Sections of the system may be tested separately, but any defect which may develop in a section previously tested and accepted shall be promptly corrected and retested at no additional cost to the Town.
5. All manholes and piping systems shall be tested in accordance with these test methods in addition to any test required by Indiana Department of Environmental Management (IDEM), State or Local plumbing codes and/or building authorities.

B. Tests

1. Deflection Test for Flexible Pipes
   a. Pipe materials considered flexible include the following:
      1) HDPE
      2) PP
      3) PVC
   b. Perform testing in presence of Town.
   c. Perform deflection testing on all flexible pipes after the final backfill has been in place for at least 30 days.

d. Perform deflection test using a mandrel pulled by hand. The mandrel (go/no-go) device shall be cylindrical in shape and constructed with 9 or 10 evenly spaced arms or prongs.
e. No pipe shall exceed a vertical deflection of 5 percent. Uncover, replace, and retest any pipe not passing the deflection test until a satisfactory result is achieved.

C. Inspection

1. Television Inspection
   a. Televise all storm sewers in excess of 40 feet in length.
   b. Perform all television inspection in presence of Town.
   c. Clean all new storm sewers by “flooding” prior to television inspection. The image shall be clear so the interior condition of the pipe is easily evaluated.
   d. Correct all unacceptable conditions found during the television inspection and re-televise until no unacceptable conditions are found.
   e. Unacceptable conditions are conditions that adversely affect the ability of the system to function as designed or to be properly maintained and may include, but are not limited to, the following:
      1) Protruding taps
      2) Cracked or faulty pipe
      3) Misaligned or deformed pipe
      4) Debris in line
      5) Infiltration/exfiltration
      6) Excessive gaps at joints
      7) Bellies or sags with a depth greater than or equal to 10 percent of the pipe diameter (maximum of 3 inches) or a length greater than 25 feet
   f. Submit copy of the televising recording (DVD format) prior to acceptance.

3.05 Cleaning

A. Provide all necessary equipment required for proper completion of the flushing of manholes and piping systems. Source, quality, and disposal of water shall be approved by the Town.

B. Remove all debris and excess soil from structures after installation and prior to flushing the storm sewer pipes, to the satisfaction of the Town.

C. Clean all new storm sewers with high pressure water jet after installation and before testing. All pipe interiors shall be kept clean until acceptance. Any foreign material discovered in the pipe during inspection shall be removed at the Contractor's expense.

PART 4 - FIGURES

4.01 Associated Standard Details

Detail No.	Description
GE-01	General Utility Location Plan & Section
GE-02	Minimum Crossover and Separation Requirements for Sewer & Water Mains
GE-03	Gravity Sewer Repair
SW-08	Metal Pipe End Section
SW-09	Precast Concrete End Section
SW-10	Trash Guard
SW-11	Standard Storm Manhole
SW-12	Type 1 Storm Manhole
SW-13	Inlet Type A
SW-14	Yard Inlet
SS-09	Standard Manhole Benches
SS-10	Precast Concrete Adjusting Ring

END OF SECTION 02720

SECTION 02730 – GRAVITY SANITARY SEWER SYSTEMS

PART 1 - GENERAL

1.01 Summary

A. Section Includes: Furnishing and installing and gravity sanitary sewers, services, manholes, and appurtenances as shown on the Drawings and as specified herein.

B. Related Work Specified Elsewhere

1. Section 02220 - Trenching, Backfilling and Compacting for Utilities
2. Section 02732 - Testing Sanitary Sewers and Force Mains
3. Section 02737 - Force Main Sewer Systems

1.02 References

A. American Association of State Highway and Transportation Officials (AASHTO), latest editions

1. AASHTO M198 - Standard Specification for Joints for Concrete Pipe, Manholes, and Precast Box Sections Using Preformed Flexible Joint Sealants
2. AASHTO M199 - Standard Specification for Precast Reinforced Concrete Manhole Sections

B. American National Standards Institute (ANSI), latest editions

1. ANSI A21.4 - Cement-Mortar Lining for Ductile-Iron Pipe and Fittings for Water
2. ANSI A21.11 - Rubber-Gasket Joints for Ductile-Iron Pressure Pipe and Fittings
3. ANSI A21.51 - Ductile-Iron Pipe, Centrifugally Cast, for Water

C. American Society for Testing and Materials (ASTM), latest editions

1. ASTM A48 - Standard Specification for Gray Iron Castings
2. ASTM A615 - Standard Specification for Deformed and Plain Carbon-Steel Bars for Concrete Reinforcement
3. ASTM A746 - Standard Specification for Ductile Iron Gravity Sewer Pipe
4. ASTM C76 - Standard Specification for Reinforced Concrete Culvert, Storm Drain, and Sewer Pipe
5. ASTM C361 - Standard Specification for Reinforced Concrete Low-Head Pressure Pipe
6. ASTM C443 - Standard Specification for Joints for Concrete Pipe and Manholes, Using Rubber Gaskets
7. ASTM C478 - Standard Specification for Precast Reinforced Concrete Manhole Sections

8. ASTM C923 - Standard Specification for Resilient Connectors Between Reinforced Concrete Manhole Structures, Pipes, and Laterals
9. ASTM C928 - Standard Specification for Packaged, Dry, Rapid-Hardening Cementitious Materials for Concrete Repairs
10. ASTM D3034 - Standard Specification for Type PSM Poly(Vinyl Chloride) (PVC) Sewer Pipe and Fittings
11. ASTM D3212 - Standard Specification for Joints for Drain and Sewer Plastic Pipes Using Flexible Elastomeric Seals
12. ASTM D4101 - Standard Specification for Polypropylene Injection and Extrusion Materials
13. ASTM F477 - Standard Specification for Elastomeric Seals (Gaskets) for Joining Plastic Pipe
14. ASTM F679 - Standard Specification for Poly(Vinyl Chloride) (PVC) Large-Diameter Plastic Gravity Sewer Pipe and Fittings
15. ASTM F714 - Standard Specification for Polyethylene (PE) Plastic Pipe (SDR-PR) Based on Outside Diameter
16. ASTM F894 - Standard Specification for Polyethylene (PE) Large Diameter Profile Wall Sewer and Drain Pipe
17. ASTM F949 - Standard Specification for Poly(Vinyl Chloride) (PVC) Corrugated Sewer Pipe With a Smooth Interior and Fittings
18. ASTM F1055 - Standard Specification for Electrofusion Type Polyethylene Fittings for Outside Diameter Controlled Polyethylene and Crosslinked Polyethylene (PEX) Pipe and Tubing
19. ASTM F1803 - Standard Specification for Poly(Vinyl Chloride) (PVC) Closed Profile Gravity Pipe and Fittings Based on Controlled Inside Diameter
20. ASTM F2648 - Standard Specification for 2 to 60 inch [50 to 1500 mm] Annular Corrugated Profile Wall Polyethylene (PE) Pipe and Fittings for Land Drainage Applications

D. American Water Works Association (AWWA) Standards, latest editions

1. AWWA C104 - Cement Mortar Lining for Ductile Iron Pipe and Fittings
2. AWWA C110 - Ductile Iron and Gray Pipe Fittings
3. AWWA C151 - Ductile Iron Pipe, Centrifugally Cast

E. Indiana Department of Transportation (INDOT) Standard Specifications, latest edition

1. Section 901 - PCC Materials
2. Section 907 - Concrete, Clay, and Plastic Drainage Components
3. Section 910 - Metal Materials

1.03 Submittals

A. Product Data, as applicable

1. Pipe
2. Fittings
3. Structures
4. Castings

5. Manhole Steps

1.04 Delivery, Storage, and Handling

A. Acceptance at Site

1. Load and unload all pipe, fittings, structure sections, and appurtenances in a manner to avoid shock and damage. Do not drop materials. Lift by hoists or skids when hand lifting is not feasible. Never allow pipe handled on skidways to skid or roll against pipe already on the ground.
2. Replace damaged or defective pipe and appurtenances at no additional cost.
3. Pipe possessing defects including, but not limited to the following, will be rejected for installation:
   a. Variations from straight centerline
   b. Elliptical shape in round pipe
   c. Lack of rigidity
   d. Illegible markings as required herein
   e. Bruised, broken, or otherwise damaged metallic or bituminous coating or liner, as applicable
   f. Deep or excessive gouges, dents, bends, or scratches on the pipe wall
   g. Fractures, punctures, or cracks passing through the pipe wall
   h. Damaged or cracked ends where such damage would prevent making a satisfactory joint
4. Concrete structures possessing defects including, but not limited to the following, will be rejected for installation:
   a. Fractures or cracks passing through the wall
   b. Honeycombed or open texture which would adversely affect the function of the box sections
   c. Ends of sections are not normal to the walls and centerline of the section

B. Storage and Protection

1. Store materials in an area safe from damage and deterioration.
2. Protect plastic pipes from extreme temperatures and ultraviolet radiation.
3. Keep interior of pipe, fittings, manhole sections, and appurtenances free from dirt and foreign matter.
4. Store gaskets in a cool location out of direct sunlight and free from contact with petroleum products.
5. Inspect all pipe, structures, and appurtenances prior to installation and promptly remove damaged or unsuitable materials. Replace with new and unused materials.

PART 2 - PRODUCTS

2.01 Polyvinyl Chloride (PVC) Pipe

A. Pipe Material

1. Provide PVC pope for sanitary sewers which are 8 to 48 inches in diameter for installations up to 25 feet deep. Provide solid wall PVC gravity sewer pipe.
   a. For pipe sizes 15-inch and less which are less than 15 feet deep, provide SDR-35 PVC conforming to ASTM D3034.
   b. For pipe sizes 15-inch and less which are 15 to 25 feet deep, provide SDR-26 PVC conforming to ASTM D3034.
   c. For pipe sizes 15-inch and less which are within 10 feet or a water main or 50 feet of a water well, regardless of depth, provide SDR-21 PVC conforming to ASTM D3034.
   d. For pipe sizes 18-inch to 48-inch, regardless of depth, provide PVC conforming to ASTM F679.

B. Joints

1. Joints shall be bell and spigot type with elastomeric seals per ASTM D3212, with gaskets conforming to ASTM F477.

C. Fittings

1. Provide fittings such as wyes, tees, and bends made in such a manner as to provide strength and watertightness at least equal to the class of the adjacent main line pipe to which they are jointed.
2. Fittings shall conform to all other requirements specified for corresponding pipe class and internal diameter. Joints shall be of the same type as used on the adjoining pipe.
3. Fabricated branches for wyes and tees shall be securely attached to the wall of the pipe in a watertight manner and shall be flush with the inside surface of the pipe.

D. Service Laterals

1. Building service laterals shall be a minimum of 6-inch diameter PVC of the same class as the adjacent sanitary sewer main, conforming to ASTM D3034.

E. Pipe Markings

1. Each length of PVC pipe shall be clearly marked with the following information at a minimum:
   a. Name of manufacturer or identification symbol
   b. Trade name or trademark
   c. Nominal pipe size
   d. Production/extrusion code

e. Material and cell class designation
f. ASTM designation

2.02 Ductile Iron (DI) Pipe

A. Pipe and Fitting Material

1. Provide DI pipe for sanitary sewers which are 8 to 60 inches in diameter.
2. Provide DI pipe and fittings in conformance with the requirements of ANSI/AWWA A21.51/C151 and ASTM A746.
3. Furnish Pressure Class 350 DI pipe.

B. Pipe Coating and Lining

1. Outside surfaces of the pipe and fittings shall be bituminous-coated complying with ANSI/AWWA A21.51/C151 and ANSI/AWWA A21.10/C110.
2. Inside surfaces of all pipes, fittings and adapters shall be lined with cement mortar and a bituminous seal coat. Cement mortar lining and bituminous seal coat shall meet the requirements of ANSI/AWWA A21.4/C104.

C. Joints

1. Supply pipe with push-on type joints conforming to ANSI A21.11 (AWWA C111).
2. Supply fittings with push-on or mechanical joints rated for 150 psi working pressure.

D. Pipe Markings

1. Each length of pipe shall be clearly marked with the following information at a minimum:
   a. Manufacturer's name or trade mark
   b. Pipe class
   c. Year of manufacture

2.03 Reinforced Concrete Pipe (RCP)

A. Pipe Material

1. Provide RCP for sanitary sewers which are 12 to 144 inches in diameter.
2. Provide RCP in accordance with ASTM C76. Select RCP of the appropriate Class and wall type for the pipe size and installation conditions.
3. Lift holes are not permitted for pipes less than 36-inch diameter. A maximum of 2 lift holes will be permitted for pipes 36-inch diameter and larger.

B. Pipe Lining

1. Provide all RCP for sanitary sewers with a factory lining.
2. The lining material shall be resistant to municipal sewage.

3. RCP pipe liner shall be completed with heat welded joints at all pipe joints where the liner is discontinuous across the joint. Liner sheets with adhesive backing or other non-heat welded joint overlays will not be permitted.
4. Liner shall be embedded in concrete to withstand a test pull of at least 100 pounds per linear inch, applied perpendicularly to the concrete surface for a period of one minute, without rupture of the locking extensions or withdrawal from embedment. This test shall be made at a temperature of 70 to 80 degrees Fahrenheit.
5. Lining material shall have good impact resistance, shall be flexible, and shall have an elongation sufficient to bridge up to 1/4-inch settling cracks, which may occur in the joint after installation, without damage to the lining.
6. The lining shall be repairable at any time during the life of the pipe by heat welding additional materials to the liner.

C. Joints

1. For burial depths up to 25 feet, furnish RCP with tongue and groove joints with compression type rubber gasket which conforms to ASTM C443.
2. For burial depths greater than 25 feet, joints shall be designed in accordance with ASTM C361.
3. Provide only one style of joint system or configuration between adjacent manholes.

D. Fittings

1. Supply fabricated wye and tee branches.

E. Pipe Markings

1. Each length of RCP shall be clearly marked with the following information at a minimum:
   a. Nominal pipe size
   b. Date of manufacture
   c. Name or trademark of manufacturer

2.04 Manhole and Accessories

A. General

1. Provide precast concrete sections with no more than 3 holes cast or drilled in the section for handling.
2. Provide rapid setting patch material in accordance with ASTM C928 and INDOT Standard Specification Section 901 or precast concrete plugs for filling all holes used for handling.

B. Precast Concrete Manholes

1. Supply a minimum of 1 adjusting ring for each manhole. Adjusting rings shall be a minimum of 4 inches and maximum of 8 inches in height for new

manholes. Supply precast concrete riser sections for adjustment greater than 8 inches in height.

2. Provide precast concrete eccentric cone section which conforms to ASTM C478. Where preapproved by Town, provide flat top section which conforms to ASTM C478. Cone and flat top sections shall have a 24-inch opening.
3. Provide precast concrete manhole risers/barrels which conform to ASTM C478, AASHTO M199, INDOT Standard Specification Section 907, and as indicated on Drawings.
4. Provide precast concrete manhole bases which conforms to ASTM C478, AASHTO M199, and INDOT Standard Specification Section 907. Base sections shall be a minimum 6 inches thick for 48-inch diameter manholes and a minimum 8 inches thick for manholes greater than 48-inch diameter. Base floor shall be sloped to the sewer invert.
5. For doghouse manhole base, provide precast concrete base with "doghouse" openings.
6. Manhole benchwalls shall be precast or constructed using a concrete mixture with a low cure time and the ability to be troweled to a smooth finish. The benchwall shall exhibit a 28-day compressive strength of no less than 4,000 psi.
7. Provide 2 rows of 1/2-inch diameter flexible butyl rubber joint gaskets conforming to ASTM C443 and AASHTO M198 for all manhole section joints. Provide Kent seal or approved equal.
8. Provide flexible rubber internal manhole chimney seal with stainless steel expansion bands as manufactured by Cretex Specialty Products, or approved equal.
9. Sumps are not permitted in manhole structures.
10. Coat the exterior surface of manholes with coal-tar epoxy, Tnemec Series 46-H-413 Hi-Build Tneme-Tar, or approved equal. Final dry mil thickness shall be minimum 20.0 mils. Coat precast manholes at the factory prior to shipment. Monolithic concrete manholes and structures cast in the field shall be cured for a minimum of seven days and coated in the field.

C. Castings

1. Provide cast iron frames and covers in accordance with ASTM A48 Class 35B and INDOT Standard Specification Section 910.
2. Supply all frames and covers from one manufacturer.
3. Furnish frames and covers which are rated for traffic, of non-rocking design, and have machined horizontal and vertical bearing surfaces. Frames and lids shall be watertight and have a grooved rubber gasket with concealed pick holes.
4. Provide manhole frame and cover as shown in casting schedule below, or approved equal. Sanitary manhole lids shall have the words “SANITARY SEWER” cast in raised letters 2 inches in height.
5. Sanitary Manhole Casting Schedule:

Type	Neenah Model	EJIW Model
Frame	R-1772-C	1022-3
Cover	R-1772-C	Type A Heavy Solid

D. Steps

1. Provide steps in all structures 4 feet deep or greater in accordance with AASHTO M199 and INDOT Standard Specification Section 907.
2. Provide steps with a minimum 10 inches of clear step width.
3. Furnish copolymer polypropylene coated steel steps or approved non-corrosive fiberglass steps.
4. Copolymer polypropylene shall meet the requirements of ASTM D4101 reinforced with deformed 1/2-inch minimum diameter reinforcing steel in accordance with ASTM A615, Grade 60.
5. Non-coated cast iron steps will not be accepted.
6. Provide steps as manufactured by M.A. Industries, Inc., American Step Company, Inc., or approved equal.

E. Pipe to Structure Connections

1. Pipe penetration holes shall be either pre-formed by manufacturer or core drilled in the field.
2. Provide flexible neoprene molded boot or resilient seal which conforms to ASTM C923. Provide Kor-N-Seal boot as manufactured by National Pollution Control Systems, Inc. or approved equal. Provide resilient seal as manufactured by A-Lok or approved equal.

2.05 Tracer Wire

A. Furnish tracer wire for service laterals.

B. For pipe installed by open excavation or within a casing, provide one strand of solid 10-gauge AWG copper wire for the entire length of pipe.

C. For pipe installed by horizontal directional drilling, provide 2 strands of 10-gauge solid, steel core hard drawn extra high strength copper tracer wire for the entire length of pipe. Supply Copperhead Direct Burial tracer wire, or approved equal.

D. Provide splice kits suitable for underground installation for splices and branch connections. Seal connection with epoxy contained in splice kit and wrap with waterproof tape.

PART 3 - EXECUTION

3.01 General

A. Inspect pipe, fittings, structures, and appurtenances prior to installation and promptly remove damaged or unsuitable materials from job site. Replace damaged or unsuitable materials with new and unused materials.

B. Install all pipes, fittings, structures, and appurtenances as shown on the standard details and as specified in this Section. Do not install pipe when, in the opinion of the Town, trench conditions are unsuitable.

C. Follow manufacturer's installation procedures when installing pipe, fittings, structures, and appurtenances.

3.02 Examination

A. Verification of Conditions

1. Before installing piping, verify location, depth, type of joint needed, and size of pipe to which connection is proposed.
2. Assure that lines can be run as proposed. Notify Town immediately for approval of any necessary deviation before lines are run.
3. Work all lengths of pipe into place without forcing.

3.03 Installation

A. Gravity Sanitary Sewer Pipe, Service Lateral, and Accessories

1. All lengths of pipe shall be dimensioned accurately to measurements established at the site and shall be worked into place without forcing. Cut sections of pipe shall be cut using proper equipment such as a chop saw to provide a beveled end.
2. Alternate sewer pipe materials consisting of ductile iron, concrete encased pipe, or SDR-21 PVC pipe must be used when one or more of the following conditions apply:
   a. Where sewers or laterals must cross under existing water mains and cannot achieve or maintain 18 inches of clearance, use alternate pipe materials for at least one full pipe length centered under the crossing.
   b. Where sewers or laterals must be routed horizontally with less than 10 feet of clearance from existing water mains, use alternative pipe materials for entire length.
3. Lay sewer pipe uniformly to line and grade so that the finished sewer will present a uniform conduit.
4. Minimum allowable cover shall be 24 inches over the top of sanitary sewer pipes and services in all locations. Shallower depth of cover may be considered by the Town under conditions where engineering design will alleviate concern for surface loadings and frost heave.
5. Set line and grade by means of laser beam and target for alignment and grade.
6. Lay sewer pipe progressively upgrade with bell upstream in a manner to form close, concentric joints with smooth bottom inverts.
7. After joint is made, place sufficient bedding material along each side of the pipe to prevent conditions that might tend to move the pipe off line or grade.
8. Temporarily plug installed piping systems at end of each day's work, or other interruption of progress on a given line. Plug shall be adequate to prevent entry of animals and entrance or insertion of deleterious materials and shall be installed in a manner satisfactory to the Town.
9. Securely attach fabricated branches for wyes and tees to wall of pipe in such a manner as to not restrict or otherwise interfere with flow characteristics of the pipe.

10. Where applicable, install laterals at a normal slope of 1/4-inch per foot. Minimum slope shall be 1/8-inch per foot.
11. Install a mechanical plug at the end of each lateral and at the end of all sewer stubs. Install the lateral at a depth of approximately 5 feet to allow each customer to connect to the end of the lateral.
12. Install a metal T-fencepost at the end of each sewer lateral for marking. It shall be the responsibility of the Contractor to protect these markers and to verify that all laterals have been properly marked.
13. Tracer Wire
    a. Install tracer wire on service lines, taped to pipe in 15 to 20-foot intervals. Do not wrap wire around pipe.
    b. Install tracer wire from sanitary sewer main to cleanout and from cleanout to building.
    c. Secure terminus of tracer wire to top of pipe

B. Manholes

1. Install sanitary structures to provide a maximum structure spacing of 500 feet.
2. For new sanitary sewer construction, install sanitary manhole at locations where there is a change in sanitary sewer alignment, slope, size, or material.
3. Unless otherwise indicated, provide 0.1 foot sewer invert drop through manholes.
4. Keep structure excavations free from water during construction.
5. Fill all areas excavated below the depth required for the structure's base with No. 8 crushed stone at Contractor’s expense.
6. Set top of casting at elevation to prevent surface water infiltration in areas of flooding or ponding. Install precast concrete risers and adjusting rings in such combination that the manhole frame will be at the proper elevation. Structures shall be completely constructed to proper finished grade before curbs, asphalt, or other pavement may be installed. Patching and filling under frames will not be permitted.
7. Install manhole frame to grade and centered.
8. Install steps beginning at approximately 8 inches below the top of the cone section (maximum 21 inches from top of casting). Install steps at 12 inches on center minimum to 16 inches on center maximum, continuous and spaced uniformly.
9. Install steps with minimum 3-inch wall embedment and minimum 4-inch clear distance projection from the wall as measured from the point of embedment.
10. Install precast concrete base, risers, cone, and flat top sections so that the axis of the manhole is vertical.
11. Install gaskets for joints in accordance with the manufacturer’s recommendations.
12. Apply a trowelable grade butyl rubber base exterior backplaster material 1/4-inch minimum thickness (when dry) on the exterior of the manhole at each joint, extending 6 inches above and 6 inches below the joint. Wrap joints with 80 gauge stretch wrap.
13. Apply a trowelable grade butyl rubber base exterior backplaster material 1/4-inch minimum thickness (when dry) on the exterior of the chimney section from 2 inches below the bottom adjusting ring to, and covering, the base of the casting.

14. Prior to backfilling, fill all holes used for handling with rapid setting patch material or with precast concrete plugs secured with Portland cement mortar.
15. Unless otherwise indicated, set castings for all structures at finish grade level. Adjust castings to the satisfaction of the Town, at Contractor's expense.
16. No mortar or grout may be installed inside manhole, except for sealing annular space around pipe penetrations.
17. Benchwalls shall have a minimum 1/2-inch per foot slope starting at the manhole wall/benchwall interface and then slope towards the top of the trough. The trough shall have a minimum depth equal to the diameter of the incoming and exiting sewers.
18. Manhole frames located in pavement shall be wrapped in minimum 3/8" preformed joint filler. The joint filler shall extend from the top to the bottom of the frame.
19. Sanitary sewer structures and castings must be inspected by the Town. Proper casting elevation will be verified. Adjustment and repairs shall be made prior to maintenance and final bond releases.

C. Doghouse Manholes

1. Doghouse manholes shall meet the requirements listed above.
2. Excavate sufficiently below existing pipe where doghouse manhole is to be placed, in order to allow for placement of crushed stone bedding and concrete blocks.
3. Use forms for pouring concrete base; do not use earth trench in lieu of forms. Pour concrete base as shown in the standard details. Pour concrete around existing pipe.
4. Sawcut cleanly and remove the top half of existing pipe after manhole is constructed.

D. Pipe to Structure Connections

1. Core drill new pipe penetration into existing structure at the proper location where the pipe enters the structure.
2. Install flexible neoprene molded boot or resilient seal to secure the pipe in the structure wall as noted in Article 2.03E.2 of this Section.

E. Connection to Existing Sewer

1. Install new service connection to existing sanitary sewer as shown on the standard details.

3.04 Field Quality Control

A. Tests

1. Test all sanitary sewer systems installed in accordance with Section 02732 - Testing Sanitary Sewers and Force Mains.

3.05 Cleaning

A. Provide all necessary equipment required for proper completion of the flushing of manholes and piping systems. Source, quality, and disposal of water shall be approved by the Town.

B. Remove all debris and excess soil from manhole after construction and prior to flushing the sewer pipes, to the satisfaction of the Town.

C. Remove all debris and excess soil from all pipe installed under this Contract by flushing with clean water. If flushing is not adequate to clean the pipes, the Contractor shall clean the pipes by jetting. It shall be the Contractor's responsibility to obtain necessary water and equipment to flush the pipes to the satisfaction of the Town.

PART 4 - FIGURES

4.01 Associated Standard Details

Detail No.	Description
GE-01	General Utility Location Plan & Section
GE-02	Minimum Crossover and Separation Requirements for Sewer & Water Mains
GE-03	Gravity Sewer Repair
SS-01	Sanitary Lateral for Shallow Sewers (Less than 15' Deep)
SS-02	Sanitary Lateral for Deep Sewers (15' Deep and Over)
SS-03	Type 1 Cleanout
SS-04	Type 2 Cleanout
SS-05	Type 3 Cleanout
SS-06	New Service Connection to Existing Sanitary Sewer
SS-07	Standard Sanitary Manhole
SS-08	Shallow Sanitary Manhole
SS-09	Type 1 Sanitary Manhole
SS-10	Standard Manhole Benches
SS-11	Precast Concrete Adjusting Ring
SS-12	Sanitary Manhole over Existing Sanitary Sewer
SS-13	Inside Drop Sanitary Manhole
SS-14	Outside Drop Sanitary Manhole
SS-15	Existing Manhole Connection

END OF SECTION 02730

SECTION 02732 - TESTING SANITARY SEWERS AND FORCE MAINS

PART 1 - GENERAL

1.01 Summary

A. Section Includes: Testing of the gravity sewers, force mains, and structures installed as applicable.

B. Related Sections

1. Section 02730 - Sanitary Sewer Systems
2. Section 02730 - Force Main Sewer Systems

1.02 References

A. American Society for Testing and Materials (ASTM), latest editions

1. ASTM F1417, Standard Practice for Installation Acceptance of Plastic Non-Pressure Sewer Lines Using Low Pressure Air

1.03 Submittals

A. Test Results

1. Gravity pipe televising recording
2. Gravity pipe air test
3. Gravity pipe joint test
4. Gravity pipe infiltration test
5. Gravity pipe exfiltration test
6. Gravity pipe deflection test
7. Force main hydrostatic test
8. Force main leakage test
9. Tracer wire continuity test
10. Manhole vacuum test

PART 2 - PRODUCTS

Not Used.

PART 3 - EXECUTION

3.01 General

A. Provide all necessary equipment and instrumentation required for proper completion of the testing of manholes and piping systems.

B. All tests shall be made in the presence of the Town. Preliminary tests made by the Contractor without being observed by the Town will not be accepted. Notify the Town at least 36 hours (not including holidays or weekends) before any work is to be inspected or tested.

C. All defects in piping systems shall be repaired and/or replaced and retested until acceptable to the Town. Repairs shall be made to the standard of quality specified for the entire system.

D. Sections of the system may be tested separately, but any defect which may develop in a section previously tested and accepted shall be promptly corrected and retested at no additional cost to the Town.

E. All manholes and piping systems shall be tested in accordance with these test methods in addition to any test required by Indiana Department of Environmental Management (IDEM), State or Local plumbing codes and/or building authorities.

3.02 Gravity Sewer Television Inspection

A. Televise all new sanitary sewers.

B. Perform all television inspection in presence of Town.

C. Clean all new sanitary sewers by “flooding” prior to television inspection. The image shall be clear so the interior condition of the pipe is easily evaluated.

D. Correct all unacceptable conditions found during the television inspection and re-televise until no unacceptable conditions are found.

E. Unacceptable conditions are conditions that adversely affect the ability of the system to function as designed or to be properly maintained and may include, but are not limited to, the following:

1. Protruding taps
2. Cracked or faulty pipe
3. Misaligned or deformed pipe
4. Debris in line
5. Infiltration/exfiltration
6. Excessive gaps at joints
7. Bellies or sags with a depth greater than or equal to 10 percent of the pipe diameter (maximum of 3 inches) or a length greater than 25 feet

F. Submit copy of the televising recording (DVD format) prior to acceptance.

3.03 Gravity Sewer Testing

A. After backfill has been placed, the Town will visually inspect all gravity flow lines to check alignment and grade. Remove all obstructions. Any sewer in which the direct light of a lamp cannot be viewed in either direction between adjacent manholes shall be considered unsatisfactory and shall be repaired by the Contractor without additional compensation.

B. Unless otherwise directed by the Town, all underground sewer system piping for gravity flow shall be subjected to an air test rather than an infiltration or exfiltration tests, however, infiltration and exfiltration test methods may be requested by the Town during construction. No extra compensation will be allowed if such tests are required. When leakage occurs in excess of the specified limits, defective pipe or joints shall be located and repaired. The Contractor, at his own expense, shall remove and reconstruct, along with retesting, as much of the original work as necessary to obtain a sewer test within the allowable leakage limits.

1. Air Test
   a. Test all sanitary sewer lines (36-inch diameter and smaller) in increments between manholes in accordance with ASTM F1417. Seal the line shall be sealed at each end. The seal at one end shall have an orifice through which to pass air into the pipe. Connect an air supply to the orifice at one end of the line. The air supply line shall contain an on-off gas valve and a pressure gauge having a range of 0 to 5 psi. The gauge shall have minimum divisions of 0.10 psi and shall have an accuracy of ± 0.04 psi.
      1) The pipe line under test shall be pressurized to 4 psig. Allow the line to stabilize between 4 psig and 3.5 psig for a period of no less than 5 minutes. If necessary, add air to the line to maintain the pressure above 3.5 psig. After the stabilization period, close the gas valve. When the line pressure stabilizes above 3.5 psig, commence timing with a stop watch. The stop watch shall be allowed to run until such time as the line pressure drops 1.0 psig or the allowable time in Table 1 is exceeded.
      2) If the pipe line to be tested is beneath the ground water level, the test pressure shall be increased 0.433 psi for each foot the ground water level is above the crown of the pipe.
      3) Allowable time shall be as shown in Table 1.

Table 1: Minimum Specified Time Required for a 1.0 psig Pressure Drop For Size and Length of Pipe Indicated, Q=0.0015 cu. ft. per min. per sq. ft.

Pipe Dia., In.	Minimum Time, min:s	Length for Minimum Time, ft.	Time for Longer Length, s	Specification Time for Length(L) Shown, min:s							
				100 ft	150 ft	200 ft	250 ft	300 ft	350 ft	400 ft	450 ft
4	3:46	597	0.380 L	3:46	3:46	3:46	3:46	3:46	3:46	3:46	3:46
6	5:40	398	0.864 L	5:40	5:40	5:40	5:40	5:40	5:40	5:42	6:24
8	7:34	298	1.520 L	7:34	7:34	7:34	7:34	7:36	8:52	10:08	11:24
10	9:26	239	2.374 L	9:26	9:26	9:26	9:53	11:52	13:51	15:49	17:48
12	11:20	189	3.418 L	11:20	11:20	11:20	14:15	17:05	19:56	22:47	25:38
15	14:10	159	5.342 L	14:10	14:10	17:48	22:15	26:42	31:09	35:36	40:04
18	17:00	133	7.692 L	17:00	19:13	25:38	32:03	38:27	44:52	51:16	57:41
21	19:50	114	10.470 L	19:50	26:10	34:54	43:37	52:21	61:00	69:48	78:31
24	22:40	99	13.674 L	22:47	34:11	45:34	56:58	66:22	79:45	91:10	102:33
27	25:30	88	17.306 L	28:51	43:16	57:41	72:07	86:32	100:57	115:22	129:48
30	28:20	80	21.366 L	35:37	53:25	71:13	89:02	106.50	124:38	142:26	60:15
33	31:10	72	26.852 L	43:06	64:38	86:10	107:48	129:16	150:43	172:21	193:53
36	34:00	66	30.768 L	51:17	76:55	102:34	128:12	153:50	179:29	205:07	230:46

      4) If the time lapse is greater than that specified, the section undergoing tests will have passed. If the time lapse is less than that specified, the

line has not passed the test and the Contractor shall be required to make all repairs and retest.

5) The Contractor shall furnish all equipment and personnel required to make all tests including pipe stoppers, air compressor, air storage tank, pressure regulating valves, pressure gauges, stopwatch, etc. Contractor shall take precautions necessary, including blocking of stoppers or plugs, to protect the safety of property and personnel.

2. Joint Test
   a. Test all joints in sanitary sewer lines over 36-inch diameter. Perform joint test using air or water under low pressure in accordance with ASTM C1103 and this specification.
   b. Perform the joint test after final backfill is placed.
   c. Use equipment made specifically for joint testing of pipelines.
   d. Joint Test Apparatus Installation
      1) Clean the joint and interior joint surfaces.
      2) Move the joint test apparatus into the sewer line to the joint to be tested and position over the joint. Make sure the end element sealing tubes straddle both sides of the joint and the hoses are attached. For the water test, the bleed-off petcock must be located at dead center.
      3) Inflate end element sealing tubes with air in accordance with equipment and manufacturer's instructions.
      4) Test Pressure Adjustment Due to Groundwater
         a) The air pressure adjustment for groundwater shall be determined by the following:
            Adjustment = Depth of Groundwater x 0.43, where
            Adjustment = adjustment added to the starting pressure of the low-pressure air test, measured in psig. The maximum adjustment shall be 2.0 psig.
            Depth of Groundwater = depth of groundwater as measured above the top of pipe, measured in feet
         b) The depth of groundwater shall be determined using groundwater monitoring wells. If more than one well is installed, take the average depth of the nearest downstream and nearest upstream monitoring locations. If monitoring wells were not installed, the adjustment shall be 2.0 psig.
   e. Joint Air Test
      1) Pressurize the void volume with air to 3.5 psi plus the necessary adjustment for groundwater above the top of pipe (maximum 2.0 psi adjustment for a 5.5 psi maximum total). Allow the air pressure and temperature to stabilize before shutting off the air supply. Start the timing of the test.
      2) Measure the pressure drop for 5 seconds.
      3) After the joint test is completed, exhaust void volume, then exhaust end element tubes prior to removal of the testing apparatus.
   f. Joint Water Test
      1) Introduce water into the void volume until water flows evenly from open petcock. Close the petcock and pressurize with water to 3.5 psi plus the necessary adjustment for groundwater above the top of pipe (maximum 2.0 psi adjustment for a 5.5 psi maximum total). Shut off the water supply and start test timing.

2) Measure the pressure drop for 5 seconds.
3) After the joint test is completed, exhaust end element tubes which will automatically release the water from the void volume, prior to removal of the testing apparatus.

g. Determination of Line Acceptance
1) If the pressure holds or drops less than 1.0 psi for the 5-second test time, the joint shall have passed the test.
2) If the pressure drops 1.0 psi or more during the 5-second test time, the joint shall have failed the test. Repair and retest as necessary until the joint passes. The method of repair shall be approved by the Town. Grouting is not an acceptable method of repair.

3. Infiltration Tests (If required)
a. When the groundwater level is at or above a point 4 feet above the top of the sewer, the infiltration test will consist of sealing off a length of sewer and measuring the depth of flow over a measuring weir, or by pumping the infiltrated water into containers for measurement. Tests shall be conducted for a minimum of 4 hours. Infiltration leakage shall not exceed 200 gallons per 24 hours per inch diameter per mile of sewer.

4. Exfiltration Tests (If required)
a. When the groundwater level is below a point 4 feet above the top of the sewer, the exfiltration test shall consist of isolating the particular section and filling the water to a point 4 feet above the ground water level in the upper manhole and allowing it to stand not less than 4 hours. The section shall then be refilled with water up to the original point and after 2 hours the drop in water surface shall be measured. The computed leakage shall not exceed 200 gallons per 24 hours per inch diameter per mile of sewer.

5. Deflection Test for Flexible Pipes
a. Pipe materials considered flexible include the following:
1) HDPE
2) PP
3) PVC
b. Perform testing in presence of Town.
c. Perform deflection testing on all flexible pipes after the final backfill has been in place at least 30 days.
d. Perform deflection test using a mandrel pulled by hand. The mandrel (go/no-go) device shall be cylindrical in shape and constructed with 9 or 10 evenly spaced arms or prongs.
e. No pipe shall exceed a vertical deflection of 5 percent. Uncover, replace, and retest any pipe not passing the deflection test until a satisfactory result is achieved.

3.04 Force Main Testing

A. Tests for exposed piping shall be made before covering and insulation is placed and prior to concealment within the building construction.

B. The pressure and leakage tests for buried piping shall be made after all jointing operations and backfilling are completed, and concrete reaction blocks and

restraints have cured at least 14 days. Piping tested before backfill is in place shall be retested after compacted backfill is placed.

C. Sections of piping between valves, and other short sections of line may be isolated for testing. If shorter sections are tested, test plugs or bulkheads required at the ends of the test section shall be furnished and installed by the Contractor, together with all anchors, braces, and other devices required to withstand the test pressure without imposing any thrust on the pipe line. The Contractor shall be solely responsible for any damage which may result from the failure of test plugs or supports.

D. Hydrostatic Test

1. All sewage force mains shall pass a hydrostatic pressure test as specified.
2. Slowly fill the piping system with water and expel all air from the pipe. Care shall be taken that all air release valves are installed and open in the section being filled, and that the rate of filling does not exceed the venting capacity of the air release valves.
3. After the section of line to be tested has been filled with water, the specified test pressure shall be applied and maintained for a minimum period of 2 hours and for such additional period necessary for the Town to complete the inspection of the line under test.
4. If defects are noted, repairs shall be made and the test repeated until all parts of the line withstand the test pressure.
5. Hydrostatic test pressure shall be 150 percent of design pressure, but not less than 100 psi. Test duration shall be 2 hours.

E. Leakage Test

1. All buried piping with slip-type or mechanical joints shall pass a leakage test. No leakage is allowed in exposed piping or buried piping with flanged, threaded, welded or mechanical joints.
2. After the specified hydrostatic test has been completed, the line shall be subjected to leakage test under a hydrostatic pressure the same as the pressure specified for the hydrostatic test.
3. The pressure shall be maintained within a maximum variation of 5 percent during the entire leakage test. Leakage measurements shall not be started until a constant test pressure has been established. The line leakage shall be measured by means of a water meter installed on the supply side of the pressure pump, or method as approved by the Town.
   a. The tested section will not be accepted if it has a leakage rate in excess of that rate determined by the formula:
      L = 0.000135 ND(P)1/2 in which;
      - L = Maximum permissible leakage rate, in gallons per hour, throughout the entire length of line being tested.
      - N = Number of gasketed joints (two for each flexible coupling joint) in the line under test.
      - D = Nominal internal diameter (in inches) of the pipe.
      - P = The actual pressure in psig on all joints in the tested portion of the line. This actual pressure shall be determined by finding the

difference between the average elevation of all tested pipe joints and the elevation of the pressure gauge and adding the difference in elevation head to the required pressure.

b. Where the leakage rate exceeds the permissible maximum, the Contractor shall locate and repair leaking joints to the extent required to reduce the total leakage to the required amount.
c. All leaks discovered within 1 year from the date of final acceptance of the work shall be located, repaired and retested by the Contractor, regardless of the total line leakage rate.

3.05 Tracer Wire Continuity Testing

A. Conduct continuity test on all tracer wire. All tracer wire found not to be continuous after testing shall be repaired or replaced.

3.06 Manhole Vacuum Testing

A. A vacuum test shall be conducted by the Contractor on all manholes to ensure watertightness and manhole integrity.

B. The equipment required to conduct a vacuum test on manholes includes inflatable pipe plugs, test head, vacuum pump, flexible air hose and a vacuum gage. The test equipment shall be capable of drawing a vacuum of 10 inches of mercury (in-Hg). The equipment shall be designed specifically for the purpose of testing manholes and shall be as manufactured by P.A. Glazier, Inc., Worchester, Massachusetts, 10002, or as approved by the Town.

C. The procedure for conducting an air test on manholes shall be in accordance with the following:

1. If possible, test each manhole immediately after assembly and prior to setting the casting or backfilling around the structure. If a test is performed after backfilling, Contractor shall be responsible for all re-excavation required to locate and correct all leaks that have been identified.
2. All pipes entering the manhole shall be securely plugged and adequately braced against the inside of the manhole to prevent being drawn out of the pipe.
3. Place the test head on the inside of the cone section and seal with an inflatable seal.

4. A vacuum of 10 in-Hg shall be drawn and the vacuum pump shut off. With the valves closed, measure the time for the vacuum to drop to 9 in-Hg. The manhole shall pass if the time is greater than the following:

Depth (ft)	Diameter (in)				
	48	54	60	66	72
	Time (s)				
8	20	23	26	29	33
10	25	29	33	36	41
12	30	35	39	43	49
14	35	41	46	51	57
16	40	46	52	58	67
18	45	52	59	65	73
20	50	53	65	72	81
22	55	64	72	79	89
24	59	69	78	87	97
26	64	75	85	94	105
28	69	81	91	101	113
30	74	87	96	106	121

PART 4 - FIGURES

Not Used.

END OF SECTION 02732

SECTION 02737 – FORCE MAIN SEWER SYSTEMS

PART 1 - GENERAL

1.01 Summary

A. Section Includes: Furnishing and installing all force mains, fittings, air release valves, and appurtenances as required for completing the work as shown on the Drawings and as specified herein.

B. Related Sections

1. Section 02220 - Trenching, Backfilling and Compaction for Utilities
2. Section 02224 - Trenchless Excavation – Horizontal Borings
3. Section 02226 - Trenchless Excavation – Directional Drilling
4. Section 02732 - Testing Sanitary Sewers and Force Mains

1.02 References

A. American National Standards Institute (ANSI), latest editions

1. ANSI A21.4 - Cement-Mortar Lining for Ductile-Iron Pipe and Fittings for Water
2. ANSI A21.10 - Ductile-Iron and Gray-Iron Fittings for Water
3. ANSI A21.11 - Rubber-Gasket Joints for Ductile-Iron Pressure Pipe and Fittings
4. ANSI A21.51 - Ductile-Iron Pipe, Centrifugally Cast, for Water
5. ANSI B16.5 - Pipe Flanges and Flanged Fittings

B. American Society for Testing and Materials (ASTM), latest editions

1. ASTM A48 - Standard Specification for Gray Iron Castings
2. ASTM A536 - Standard Specification for Ductile Iron Castings
3. ASTM C890 - Standard Practice for Minimum Structural Design Loading for Monolithic or Sectional Precast Concrete Water and Wastewater Structures
4. ASTM C913 - Standard Specification for Precast Concrete Water and Wastewater Structures
5. ASTM C928 - Standard Specification for Packaged, Dry, Rapid-Hardening Cementitious Materials for Concrete Repairs
6. ASTM D1784 - Standard Specification for Rigid Poly(Vinyl Chloride) (PVC) Compounds and Chlorinated Poly(Vinyl Chloride) (CPVC) Compounds
7. ASTM D2241 - Standard Specification for Poly(Vinyl Chloride) (PVC) Pressure-Rated Pipe (SDR Series)
8. ASTM D3035 - Standard Specification for Polyethylene (PE) Plastic Pipe (DR-PR) Based on Controlled Outside Diameter
9. ASTM D3261 - Butt Heat Fusion Polyethylene (PE) Plastic Fittings for Polyethylene (PE) Plastic Pipe and Tubing
10. ASTM D3350 - Polyethylene Plastics Pipe and Fittings Materials

11. ASTM F714 - Standard Specification for Polyethylene (PE) Plastic Pipe (SDR-PR) Based on Outside Diameter

C. American Water Works Association (AWWA) Standards, latest editions

1. AWWA C104 - Cement Mortar Lining for Ductile Iron Pipe and Fittings
2. AWWA C110 - Ductile Iron and Gray Pipe Fittings
3. AWWA C111 - AWWA C111 - Rubber Gasket Joints for Ductile Iron Pressure Pipe and Fittings
4. AWWA C151 - Ductile Iron Pipe, Centrifugally Cast

D. Indiana Department of Transportation (INDOT) Standard Specifications, latest edition

1. Section 901 - PCC Materials
2. Section 910 - Metal Materials

1.03 Submittals

A. Product Data

1. Pipe
2. Valves
3. Casing Pipe
4. Fittings
5. Air release valves
6. Joint restraints
7. Hydrants
8. Concrete
9. Other related items and appurtenances

B. Test Results

1. Fusion joint log (HDPE pipe)

1.04 Quality Assurance

A. HDPE Pipe: Bonders and bonding operators shall be qualified in the use of the written bonding procedure specification (BPS) as required by ASME B31.3, Chapter VII, paragraph A-328. Qualification records certifying that bonders and bonding operators employed to perform the fusion bonding are qualified in the BPS shall be submitted prior to the commencement of fusion bonding work. Bonders and bonding operators shall be qualified for the specific fusion bonding equipment utilized in the fusion bonding work.

1.05 Delivery, Storage, and Handling

A. Acceptance at Site

1. Deliver, store and handle all materials in accordance with manufacturer's recommendations.
2. Load and unload all pipe, fittings, valves, hydrants, and appurtenances by hoists. Do not drop materials. Do not skid or roll materials on or against each other. Use padded slings, hooks and pipe tongs to handle materials in a manner to prevent damage.
3. Pipe possessing defects including, but not limited to, the following will be rejected for installation:
   a. Variations from straight centerline
   b. Elliptical shape in round pipe
   c. Lack of rigidity
   d. Illegible markings as required herein
   e. Bruised, broken, or otherwise damaged metallic or bituminous coating or liner, as applicable
   f. Deep or excessive gouges, dents, bends, or scratches on the pipe wall
   g. Fractures, punctures, or cracks passing through the pipe wall
   h. Damaged or cracked ends where such damage would prevent making a satisfactory joint
4. All materials deemed damaged by the Town will not be accepted.

B. Storage and Protection

1. Store materials in an area safe from damage and deterioration. Keep the interior of pipe, fittings, valves, hydrants and appurtenances free from dirt and foreign matter. Drain and store valves and hydrants in a manner to prevent damage from freezing. Store gaskets in a cool location out of direct sunlight and free from contact with petroleum products.
2. Do not stack any pipe higher than recommended by manufacturer. Do not stack fittings, valves, and hydrants.

PART 2 - PRODUCTS

2.01 Ductile Iron (DI) Force Main

A. Pipe and Fittings

1. Provide ductile iron pipe centrifugally cast in metal or sandlined molds and conforming to ANSI A21.51/AWWA C151. Minimum thickness class shall be Class 50 for all sizes.
2. Provide mechanical joint ductile iron fittings conforming to ANSI A21.10/ AWWA C110 and ANSI A21.11/AWWA C111.
3. Furnish DI pipe and fittings which have a standard thickness cement mortar lining as specified in ANSI A21.4/AWWA C104 and an outside coating as specified in ANSI A21.51/AWWA C151.

4. Furnish gaskets for mechanical joints fittings and DI pipe push-on joints which conform to ANSI A.21.11/AWWA C111.

B. Joints and Joint Restraint

1. Supply the pipe with push-on type joints conforming to ANSI A21.11/ AWWA C111.
2. Use restrained joints in addition to thrust blocking. Joint restraint shall be Lok-Tyte, Loc-Fast, or approved equal.
3. Provide restrained joints for all pipe installed in steel casing.
4. Restrain pipe joints as specified in Part 3 of this section.

C. Pipe Markings

1. Each length of pipe shall be marked with the following information at a minimum:
   a. Manufacturer's name or trademark
   b. Pipe class
   c. Year of manufacture

2.02 High Density Polyethylene (HDPE) Force Main

A. Pipe

1. Provide HDPE pipe manufactured from extra high molecular weight, high density PE 3408 polyethylene resin. Polyethylene pipe shall meet the requirements of ASTM D3035 and ASTM F714. Cell classification shall be 345444C per the requirements of ASTM D3350.
2. Furnish pipe which is suitable for a working pressure of 80 psi, surge pressure of 120 psi, and a depth of cover of minimum 54 inches.
3. Supply minimum DR-21 polyethylene pipe for open cut installation and minimum DR-11 for directional drilling installation, and a nominal IPS (Iron Pipe Size) outside diameter.

B. Fittings

1. Provide HDPE fittings manufactured from extra high molecular weight, high density PE 3408 polyethylene resin in accordance with ASTM D3261. Fittings shall be manufactured by injection molding.
2. Provide HDPE fittings manufactured by the same manufacturer as the pipe to which fusion bonding is intended, using identical materials.
3. Fittings shall be manufactured to meet the same pressure rating as the pipe with an included 2:1 safety factor. The pipe DR (Dimension Ratio) shall be used to determine the fitting pressure rating requirements.
4. Fitting shall be manufactured in facilities designed for that purpose. Field-fabricated fitting shall not be allowed.
5. Provide branch saddle reducing tees to connect air release valves to the force mains. Saddles shall be main line size by 4 inches, with a 4-inch flange adapter and back-up ring, and 4-inch by 2-inch NPT companion flange.

C. Flange Backup Rings and Gaskets

1. Provide DI convoluted type backup rings, fabricated from ductile iron per ASTM A536, grade range 60/40/18 to 65/45/12. Ductile iron flange backup ring bolting dimension shall conform to ANSI B16.5 Class 150.
2. Backup rings shall be finished as cast with flash removed from all edges and bolt holes to the specified dimensions. Additionally backup rings shall be epoxy coated, with Bitumastic 300M High Build Coal Tar Epoxy per manufacturer's recommendations.
3. Gasket materials shall be compatible with the service of the piping system. Asbestos gaskets will not be allowed.

D. Allow HDPE pipe to reach ambient temperature for the installed condition before final cutting, installation of concrete restraint system, or connection of transition couplings.

2.03 Polyvinyl Chloride (PVC) Force Main

A. Pipe and Fittings

1. Provide PVC pipe conforming to ASTM D2241, SDR-21 for force mains 4-inch diameter or greater and SDR-26 for force mains smaller than 4-inch diameter.
2. Pipe materials shall conform to ASTM D1784, Type 1, Grade 1, for 2,000 psi design stress.
3. Fittings shall be mechanical joint iron or ductile iron conforming to ANSI A21.10/AWWA C110 and ANSI A21.11/AWWA C111. Restrained joints maybe used instead of mechanical joints and thrust blocking and shall be mechanical wedge-action type as approved by the Town.

B. Joints and Joint Restraint

1. Pipe joints shall be single gasket bell and spigot type, the bells being formed integrally with the pipe.
2. Pipe and couplings shall be made of unplasticized PVC compounds, minimum cell classification of 12454, as defined in ASTM D1784.
3. The PVC restrained joint pipe system shall be SDR-17 and conform to ASTM D2241, including pressure test requirements.
4. PVC restrained joint pipe system shall be Yellowmine Integral Bell or Certa-Lok Yelomine pipe with couplings as manufactured by CertainTeed Corporation, or approved equal.

C. Pipe Markings

1. Each length of PVC pipe shall be clearly marked with the following information at a minimum:
   a. Name of manufacturer or identification symbol
   b. Trade name or trademark
   c. Nominal pipe size
   d. Production/extrusion code

e. Material and cell class designation
f. ASTM designation

2.04 Plug Valves and Boxes

A. Valve

1. Provide eccentric plug valves for wastewater service which are non-lubricated with a resilient seating surface.
2. Buried valves shall have mechanical joint ends conforming to ANSI/AWWA C110 requirements.
3. Port areas shall be 100 percent of full pipe area.
4. Valves shall have permanently lubricated stainless steel slave-type bearings, or other lubricated type bearings, in the upper and lower stem journals.
5. Valve seats shall be corrosion resistant with a high nickel content.
6. Bonnet shaft seals shall be capable of being replaced while force main and valve remain in service, thereby eliminating the need to take pumping station out of service.
7. All exposed nuts, bolts, springs and washers shall be zinc-coated steel.
8. Buried valves, 8 inches and larger, shall have worm-gear actuators. Buried valves smaller than 8 inch shall have totally enclosed and sealed operators with a 2 inch square AWWA operating nut.
9. Plug valves shall be capable of providing drip-tight shutoff with flow in either direction up to the valve's rated operating pressure.
10. The plug face material shall be nitrile-butadiene, Neoprene or as approved by the Town.
11. Valves and actuators for buried service shall have seals on all shafts and gaskets on valve and actuator covers to prevent the entry of fluid.
12. Actuator shall be capable of fully seating and unseating the valve and have a maximum torque of 50 foot-pounds on operating nuts.
13. Valves shall be DeZurik, Val-Matic, or equal.

B. Valve Box

1. All buried valves shall have an extension stem, cast or ductile iron valve box and cover, and tee-wrench.

2.05 Sewage Air and Vacuum Valves

A. Sewage Air Release and Air Vacuum Valve shall have cast iron body and cover with a 2-inch N.P.T. inlet and 1-inch N.P.T. outlet with a stainless steel float and float guide.

B. Provide valve as manufactured by Val-Matic Valve and Manufacturing Co., or approved equal.

2.06 Valve Vault

A. Structure

1. Provide precast concrete sections with no more than 3 holes cast or drilled in the section for handling.
2. Provide rapid setting patch material in accordance with ASTM C928 and INDOT Standard Specification Section 901 or precast concrete plugs for filling all holes used for handling.
3. Provide square precast concrete vaults which conform to ASTM C913 and C890 and as indicated on Drawings.

B. Casting

1. Provide cast iron frames and covers in accordance with ASTM A48 Class 35B and INDOT Standard Specification Section 910.
2. Supply all frames and covers from one manufacturer.
3. Furnish frames and covers which are rated for traffic, of non-rocking design, and have machined horizontal and vertical bearing surfaces. Frames and lids shall be watertight and have a grooved rubber gasket with concealed pick holes.
4. Provide frame and cover as shown on standard detail, or approved equal.

2.07 Tracer Wire

A. Furnish tracer wire for PVC and HDPE pipe.

B. For pipe installed by open excavation or within a casing, provide one strand of solid 10-gauge AWG copper wire for the entire length of pipe.

C. For pipe installed by horizontal directional drilling, provide 2 strands of 10-gauge solid, steel core hard drawn extra high strength copper tracer wire for the entire length of pipe. Supply Copperhead Direct Burial tracer wire, or approved equal.

D. Provide splice kits suitable for underground installation for splices and branch connections. Seal connection with epoxy contained in splice kit and wrap with waterproof tape.

2.08 Location Material

A. Location material shall be metallic type tape such as Terra Tape Detectable as manufactured by Reef Industries, Inc. or approved equal. Location material shall be marked with “Caution Sewer Line Buried Below”.

2.09 Force Main Marker Post

A. Provide model PMP 7CE with lid C2 as manufactured by Handley Industries, or approved equal.

B. The following information shall be clearly printed on force main marker post:

1. Brownsburg
2. Sanitary Sewer Line Buried Below
3. Emergency Contact 317-852-1100
4. Caution Sewer Pipeline

PART 3 - EXECUTION

3.01 General

A. Inspect force mains, fittings, valves, and appurtenances prior to installation and promptly remove damaged or unsuitable materials from the job site. Replace damaged or unsuitable materials with new and unused materials.

B. Install all force mains, fittings, valves, and appurtenances as shown on the standard details and as specified in this Section. Do not install pipe when, in the opinion of the Town, trench conditions are unsuitable.

C. Follow manufacturer's installation procedures when installing force mains, fittings, valves, and appurtenances.

3.02 Installation of Force Mains

A. Before installing piping, the Contractor shall carefully verify location, depth, type of joint needed and size of pipe to which connection is proposed. He shall assure himself that the lines can be run as contemplated. Any necessary deviation shall be referred to the Town for final approval before lines are run.

B. All lengths of pipe shall be dimensioned accurately to measurements established at the site, and shall be worked into place without forcing. Cut sections of pipe shall be cut using pipe cutters to provide a square end.

C. Lay force main pipe uniformly to line and grade so that the finished sewer will present a uniform conduit. The Contractor, at his own expense, shall set force main alignment and grade for the minimum depth of cover of 54 inches.

D. Contractor shall take precautions to avoid constructing "high points" in the force main other than those already shown on the Drawings. The Contractor shall be responsible for installing at his own costs any additional Sewage Air Release Valves necessary in these areas to vent accumulated air and gases trapped at these "high points".

E. Tracer Wire

1. Install tracer wire on HDPE and PVC pipe and service lines, taped to pipe in 15 to 20-foot intervals. Do not wrap wire around pipe.

2. Install tracer wire boxes at intervals not to exceed 5,000 feet. Seal splices and branch connections with epoxy and wrap with tape. Install one pound anodes every mile or less.

F. Install length of extension stems on valve boxes so that plug valve operating nut is 9 to 12 inches below the ground surface.

G. Temporarily plug installed piping systems at the end of each day's work, or other interruption of progress on a given line. Plug shall be adequate to prevent entry of animals and entrance or insertion of deleterious materials and shall be installed in a manner satisfactory to the Town.

H. HDPE Pipe Fusion Bonding Procedure

1. Piping joints other than those shown as flanged or otherwise mechanically connected shall be butt fusion bonded in accordance with a written bonding procedure specification (BPS) as required by ANSI/ASME B31.3, Chapter VII, paragraph A-328. BPS shall include cutting and facing requirements and shall utilize a data logger.
2. Materials to be fusion bonded shall be from the same manufacturer.
3. Bonders and bonding operators shall be qualified in the use of the BPS as required by ANSI/ASME B31.3, Chapter VII, paragraph A-328. Qualification records certifying that borders and bonding operators employed to complete fusion bonding are qualified in the BPS shall be submitted prior to commencement of fusion bonding work.
4. Bonding equipment specified in the BPS shall be in proper operating condition. Equipment heater performance shall be tested and certified prior to use for fusion bonding. Bonders and bonding operators shall be qualified for the specific bonding equipment utilized in the fusion bonding work.
5. The joining method shall be performed in strict accordance with the pipe manufacturer's requirements. The butt fusion equipment used in the jointing procedure shall be capable of meeting all conditions required by the pipe manufacturer, including temperature, alignment and fusion pressure. Heat fusion joining shall be 100 percent efficient offering a joint weld strength at least equal to the tensile strength of the pipe. Each butt fusion joint shall be logged electronically by the butt fusion unit, for quality control, by such equipment as The Data Logger manufactured by McElroy Manufacturing, Inc. Logged fusion joints shall be stored in the Data Logger unit, such that it can be downloaded and printed weekly for submittal to the Town.

I. HDPE pipe installed by open cut shall be butt fusion bonded at grade level and lowered into the trench using nylon slings to avoid damage to the pipe. Chains or cable type chokers must be avoided when lifting sections of pipe.

J. PVC pipe installed by open cut shall be joined at grade level and lowered into the trench using nylon slings to avoid damage to the pipe. Chains or cable type chokers must be avoided when lifting sections of pipe.

K. Horizontal directional drilling of HDPE and PVC pipe shall be as specified in Section 02226 – Trenchless Excavation – Directional Drilling.

L. Install location material above force main between 18 to 24 inches deep.

3.03 Sewage Air and Vacuum Valves

A. Keep structure excavations free from water during construction.

B. Fill all areas excavated below the depth required for the structure's base with No. 8 crushed stone at Contractor’s expense.

C. Install vault sections so that the axis of the structure is vertical.

D. Prior to backfilling, fill all holes used for handling with rapid setting patch material or with precast concrete plugs secured with Portland cement mortar.

3.04 Cleaning

A. Provide all necessary equipment required for proper completion of the flushing of structures and piping systems. Source, quality, and disposal of water shall be approved by the Town.

B. Remove all debris and excess soil from all pipe installed under this Contract by flushing with clean water. It shall be the Contractor's responsibility to obtain necessary water and equipment to flush the pipes to the satisfaction of the Town.

PART 4 - FIGURES

4.01 Associated Standard Details

Detail No.	Description
WW-01	Air/Vacuum Release Valve & Vault
WW-02	Force Main Reaction Blocking
WW-03	Force Main Restrained Piping
WW-04	Force Main Connection at Manhole

END OF SECTION 02737

SECTION 02738 - COMPOSITE LINING SYSTEM

PART 1 - GENERAL

1.01 Summary

A. Section Includes: Furnishing and installing full depth composite lining system for the purpose of preventing infiltration and providing corrosion protection as shown on the Drawings and as specified herein.

1.02 References

A. American Concrete Institute (ACI), latest editions

1. ACI 305R – Guide to Hot Weather Concreting
2. ACI 503R – Use of Epoxy Compounds with Concrete

B. American Society for Testing and Materials (ASTM), latest editions

1. ASTM C78 – Standard Test Method for Flexural Strength of Concrete (Using Simple Beam with Third-Point Loading)
2. ASTM C109 – Standard Test Method for Compressive Strength of Hydraulic Cement Mortars (Using 2-in. or [50-mm] Cube Specimens)
3. ASTM C190-85 – Method of Test for Tensile Strength of Hydraulic Cement Mortars
4. ASTM C596 – Standard Test Method for Drying Shrinkage of Mortar Containing Hydraulic Cement
5. ASTM C876 - Standard Test Method for Corrosion Potentials of Uncoated Reinforcing Steel in Concrete
6. ASTM D4138 – Standard Practices for Measurement of Dry Film Thickness of Protective Coating Systems by Destructive, Cross-Sectioning Means

C. International Concrete Repair Institute (ICRI), latest editions

1. Technical Guideline No. 03730 – Surface Preparation Guidelines for the Repair of Deteriorated Concrete Resulting From Reinforcing Steel Corrosion

D. National Association of Corrosion Engineers, NACE International Standards (NACE), latest editions

E. Society of Protective Coatings (SSPC) Standards, latest editions

1.03 Submittals

A. Product Data

1. Physical Properties
2. Surface Preparation
3. Application Instructions
4. Curing Instructions

B. Shop Drawings

1. Technical data sheet on each product used, including ASTM test results indicating the product conforms to and is suitable for its intended use per these specifications
2. Material Safety Data Sheets (MSDS) for each product used
3. Project specific guidelines and recommendations
4. Design details for any additional ancillary systems and equipment to be used in site and surface preparation, application and testing
5. 3-year warranty

C. Qualification Statements

1. Manufacturer certification that Contractor has been trained and approved in the handling, mixing and application of the products to be used
2. Certification that the equipment to be used for applying the products has been manufactured or approved by the lining system manufacturer and Contractor personnel have been trained and certified for proper use of the equipment
3. Five (5) recent references of Contractor (projects similar size and scope) indicating successful application of the composite lining system
4. Proof of any necessary federal, state or local permits or licenses necessary for the project

1.04 Quality Assurance

A. Contractor shall initiate and enforce quality control procedures consistent with applicable ASTM, NACE and SSPC standards and the protective coating manufacturer's recommendations.

1.05 Delivery, Storage, and Handling

A. Composite lining materials shall be handled according to their material safety data sheets.

B. Store materials in accordance with manufacturer’s recommendations.

1.06 Warranty

A. The Certified Applicator shall warrant and guarantee all work against defects in materials and workmanship for a period of 3 years beyond the date of acceptance. The Certified Applicator shall provide this written warranty to the Town with the Shop Drawing submittals.

1. Certified Applicator shall, within 60 days after receipt of written notice thereof, make arrangements for the repair of defects in materials and/or workmanship which may develop during the said period, and any damage to other work caused by such defects or the repairing of the same, at his own expense and without cost to the Town.

2. If defects in the liner equal or exceed 10 percent of the surface area of the corrosion barrier coating, the Contractor shall be responsible for the application of an additional corrosion barrier coating matching the thickness specified herein with no additional charge to the Town.
3. Defects will be deemed to have occurred if the liner fails to:
   a. prevent active infiltration into the structure
   b. prevent the internal damage or corrosion of the structure
   c. protect the substrate and environment from contamination by effluent

PART 2 - PRODUCTS

2.01 Composite Lining System

A. Provide composite lining system components from single manufacturer.

B. Hydraulic Cement Mortar - fast-setting mortar used to stop leaks through cracks and holes

1. Composition: Blend of hydraulic cements and fillers
2. Compressive Strength, ASTM C109
   a. 1 Day: 3,500 psi
   b. 7 Day: 4,900 psi
   c. 28 Day: 5,500 psi
3. Tensile Strength, ASTM C190
   a. 7 Day: 290 psi
   b. 28 Day: 575 psi
4. Working Time: 45 to 90 seconds at 77 degrees Fahrenheit
5. Color: Dark gray
6. Product: Mainstay ML-10 or approved equal

C. Epoxy Putty – thixotropic epoxy surface and void filler for use in filling irregular surfaces such as voids and bugholes prior to the application of protective or reinforcing topcoats.

1. Composition: 100 percent solids, modified epoxy putty
2. Number of Components: 2
3. Color: Medium Gray
4. Product: Madewell 1312P or approved equal

D. Restoration Mortar - low shrinkage, high strength, sprayable microsilica mortar

1. Composition: Blend of cements, microsilica, thermoplastic fibers, densifiers, and modifiers; mortar shall not contain calcium aluminate cements or aggregates
2. Compressive Strength, ASTM C109
   a. 1 Day: 3,000 psi
   b. 28 Days: 10,000 psi
3. Flexural Strength, ASTM C78
   a. 1 Day: 535 psi

b. 28 Days: 1,400 psi
4. Tensile Strength, ASTM C190-85
   a. 1 Day: 330 psi
   b. 28 Days: 790 psi
5. Shrinkage, ASTM C596
   a. 28 Days @ 90%: 0.01 percent
6. Uniaxial Tensile Bond Strength, ACI 503R, Appendix A
   a. 28 Day: Greater than 500 psi over high strength concrete (5,000 psi compression strength concrete; bond strength governed by substrate tensile strength)
   b. Minimum acceptable bond: 145 psi
7. Color: Dark gray
8. Product: Mainstay ML-72 or approved equal

E. Corrosion Barrier Coating - epoxy coating

1. Composition: 100 percent solids, modified epoxy coating
2. Thickness: Minimum of 100 mils in 1 or 2 coats
3. Number of Components: 2
4. Finish: Gloss
5. Color: Shall be chosen by the Town (White, Light Grey, or Light Blue)
6. Product: Mainstay DS-5 or approved equal

F. Corrosion Barrier Primer/Sealer

1. Composition: 100 percent solids, epoxy primer/sealer
2. Thickness: 1 to 2 mills
3. Number of Components: 2
4. Color: Semitransparent
5. Product: Madewell 927 or approved equal

G. Manhole Frame Seal - flexible epoxy

1. Composition: 100 percent solids, flexible epoxy trowel-grade mastic
2. Thickness: minimum of 1/4-inch
3. Number of Components: 2
4. Finish: Semigloss
5. Color: Light gray
6. Product: Madewell 806 or approved equal

PART 3 - EXECUTION

3.01 General

A. Contractor shall conform with all local, state and federal regulations including those set forth by OSHA, RCRA, IDEM, the EPA and any and all other applicable authorities.

B. Contractor shall bear all costs and responsibilities associated with bypass pumping and flow control as needed. Any active flows shall be dammed, plugged or diverted as required to ensure that the liquid flow is maintained below the surfaces to be coated. Flows should be totally plugged and/or diverted when coating the invert. All extraneous flows into the manhole at or above the area coated shall be plugged and/or diverted until the lining system has set hard to the touch. As an option, the Contractor may add hot air (at no additional cost) to the manhole to accelerate set time of the coating.

C. Apply composite lining system to new and existing structures, including:

1. All manholes receiving direct discharge from a force main (3-inch diameter or larger)
2. First 2 manholes downstream of a manhole receiving direct discharge from a force main (3-inch diameter or larger)
3. Lift station wet wells
4. Other structures as indicated by the Town or as designated on the Drawings

D. The interior structure surfaces to be coated shall include the bench and walls. The interior shall be coated from the bench/channel point of union to approximately 2 inches above the bottom of the structure frame.

E. Before application of each material, surfaces to be lined must be inspected by the Town. Any deficiencies identified by those listed above shall be corrected by the Contractor prior to the application of subsequent material.

F. Inspection by the Town or the waiver of inspection of any portion of the work shall not relieve the Contractor of responsibility to perform the work as specified.

3.02 Examination

A. Examine surfaces to receive restoration mortar. Notify the Town in writing if surfaces are not acceptable. Do not begin surface preparation or application until unacceptable conditions have been corrected.

3.03 Preparation

A. Standard Portland cement or new concrete (not quick setting high strength cement) must be well cured prior to application of the protective coating. Generally, 28 days is adequate cure time for standard Portland cement. Installation of the protective coating shall not commence until the concrete substrate has properly cured in accordance with these specifications. If earlier application is desired, compressive and tensile strengths of the concrete can be tested to determine if acceptable cure has occurred.

B. Remove existing coatings prior to application of the new protective epoxy coating. Applicator shall maintain strict adherence to applicable NACE and SSPC recommendations with regard to proper surface preparation and compatibility with existing coatings.

C. Provide the Town with a minimum of 72 hours advance notice (not including holidays or weekends) of completion of surface preparation and start of lining application.

3.04 Application

A. Protective coating must be applied by a Certified Applicator of the protective coating manufacturer and according to manufacturer specifications.

3.05 Installation

A. Surface Preparation

1. Prepare surfaces in accordance with manufacturer's instructions.
2. Clean surfaces by water or abrasive blasting (minimum 3,500 psi water blast), or hand or power tools as required to remove all unsound concrete, contaminants, dirt, debris, and deteriorated reinforcing steel.
3. Inspect cleaned surfaces to identify and mark corroded reinforcing steel and to locate cracks, leaks, and joints.
4. If indicated, perform electrical potential testing in accordance with ASTM C876.
5. Replace or treat corroded reinforcing steel, repair cracks and leaks, and treat joints in accordance with manufacturer's instructions and as approved by the Town.
6. Refer to ICRI Technical Guideline No. 03730.
7. Apply epoxy putty after cleaning reinforcing steel to protect the steel from contamination and re-rusting.
8. Prepare surfaces to have a minimum profile of 1/16-inch, with aggregate exposed.
9. Inspect surfaces for soundness.
10. Saturate all surfaces thoroughly with clean water.
11. Apply restoration mortar as soon as water sheen is no longer visible (saturated surface dry).
12. Hydrostatic Leak Correction
    a. Stop visible hydrostatic leaks by application of hydraulic cement mortar, after completion of surface preparation. If indicated, perform electrical potential testing in accordance with ASTM C876.
        1) Mix only 1 to 2 pounds of hydraulic cement mortar at a time.
        2) Add water to form a viscous mass with consistency of modeling clay.
        3) Apply by hand or trowel.
        4) Press mixed material firmly into place, starting at top of leak and working downward.
    b. Inject flowing leaks or cracks using a suitable polymer gel or foam approved by the Town. Remove excess or spilled material from concrete surface before application of restoration mortar.

B. Application of Restoration Mortar

1. Apply restoration mortar in accordance with manufacturer's instructions.

2. Apply uniformly to substrate to the specified thickness. Do not apply to manhole frame.
3. Do not trap air in corners, behind exposed reinforcing steel, or between lifts.
4. Apply a minimum thickness of 1/2-inch above peaks of existing profile after surface preparation.
5. Finish surface with wood float, sponge float, broom, or brush to produce a textured surface upon which to apply corrosion barrier coating.
6. Hot Weather Application:
   a. Follow manufacturer's instructions to reduce evaporation rate of surface moisture until corrosion barrier coating can be applied.
   b. If applying mortar under conditions such as high temperatures of mortar, substrate, or air; high winds; and low humidity; alone or in combination; rapid evaporation of surface moisture can occur and cause plastic shrinkage cracking. Apply corrosion barrier coating or corrosion barrier primer/ sealer a maximum of 1 hour after placing restoration mortar.
   c. If conditions prevent application of corrosion barrier coating or primer, refer to ACI 305R, Figure 2.1.5 to estimate the evaporation rate of surface moisture from the mortar, based on temperatures, relative humidity, and wind velocity. Cover with plastic film or wet burlap to limit evaporation rate to a maximum of 0.1 pounds per square foot per hour.
7. Cold Weather Application:
   a. Follow manufacturer's instructions for minimum application temperature and minimum number of days to protect from freezing.
   b. During cold weather (a period when, for more than 3 successive days, the average daily outdoor temperature drops below 40 degrees Fahrenheit) place restoration mortar at a minimum temperature of 55 degrees Fahrenheit and protect mortar from freezing for a minimum period of 3 days at a temperature between 55 and 75 degrees Fahrenheit. Gradually reduce mortar temperature during the protection period so that the final 24 hours is held as close to 55 degrees Fahrenheit as practical.
   c. During periods not defined as cold weather, but when freezing temperatures may occur, protect the mortar against freezing as specified for cold weather for the first 24 hours after application.

C. Corrosion Barrier Coating

1. Apply corrosion barrier coating in accordance with manufacturer's instructions. Do not apply to manhole frame.
2. Apply corrosion barrier coating as soon as possible after finishing of restoration mortar, but before it is allowed to cure for more than 4 hours. If the corrosion barrier coating cannot be applied within this time frame, the surface of the restoration mortar shall be primed within that time frame with corrosion barrier primer/sealer to hold the surface for up to 72 hours.
3. Do not allow surface contamination to the finished restoration mortar before application of corrosion barrier coating. Remove any contamination of primed mortar before application of corrosion barrier coating by means of high pressure (minimum 3,500 psi) water blast.
4. Apply a minimum thickness of 100 mils.

5. Curing of Corrosion Barrier Coating
    a. Allow a minimum cure time of 24 hours at 70 degrees Fahrenheit or as directed by the manufacturer.
    b. Continue to protect Composite Liner from freezing throughout protection periods specified for cold weather application.
    c. Shelter Composite Liner from direct impingement of water until 1 to 3 hours after application of corrosion barrier coating, depending on substrate temperatures, after which cure sufficiently to be undamaged by water impingement or immersion at ordinary velocities.
    d. It may be necessary to plug services or main lines temporarily in order to achieve these environmental conditions.
6. Allow coating to reach a tack-free condition before being immersed.

D. Application of Frame Seal

1. Surface Preparation
    a. Corrosion Barrier Coating: Clean/decontaminate corrosion barrier coating if required. If within recoat window (72 hours) of corrosion barrier coating, no further surface preparation is necessary. If recoat window has been exceeded, sand, sandblast, or wire brush, followed by a solvent wipe of the epoxy corrosion barrier coating surface after cleaning/ decontamination.
    b. Frame: Wire brush clean to SSPC SP-3 (Power Tool Cleaning) condition to remove all loose rust and any restoration mortar or corrosion barrier coating overspray. Surface shall be clean and dry before application of structure frame seal material.
2. Apply frame seal to a minimum thickness of 1/4-inch to structure, grade rings (chimney) and structure frame. Height of application depends on overall height of chimney, but minimum height will be 4 inches (2 inches above and below joint).
3. Apply material with a putty knife to a uniform thickness and texture.
4. Allow structure frame seal to cure at least 24 hours in load bearing applications.
5. Do not apply below 50 degrees Fahrenheit. Protect from freezing for at least 48 hours after application.

3.06 Field Quality Control

A. Tests

1. All testing equipment shall be provided by the Contractor. All tests shall be performed by the Contractor in the presence of the Town.
2. During application a wet film thickness gage, such as those available through Paul N. Gardner Company, Inc. meeting ASTM D4138, shall be used to ensure a monolithic coating and uniform thickness during application.
3. After the corrosion barrier coating has set hard to the touch it shall be inspected with high-voltage holiday detection equipment.
    a. Surface shall first be dried.

b. An induced holiday shall be made on to the coated concrete surface and shall serve to determine the minimum/maximum voltage to be used to test the coating for holidays at that particular area.
c. The spark tester shall be initially set at 100 volts per 1 mil (25 microns) of film thickness applied but may be adjusted as necessary to detect the induced holiday (refer to NACE RPO188-99).
d. All detected holidays shall be marked and repaired by abrading the coating surface with grit disk paper or other hand tooling method.
e. After abrading and cleaning, additional protective coating material can be hand applied to the repair area.
f. All touch-up/repair procedures shall follow the protective coating manufacturer's recommendations.

B. Inspection

1. A visual post-rehabilitation inspection shall be made by the Town and Contractor at the conclusion of said work.
2. A visual inspection shall be made by the Town and manufacturer's representative prior to the date of acceptance for the project.
3. On a date not before 11 months from the date of acceptance, a 1-year visual inspection shall be made by the Town, Contractor and manufacturer's representative. Any deficiencies in the finished coating shall be marked and repaired by the Contractor according to the procedures set forth herein at no additional cost to the Town.
4. Town will conduct annual inspections of sealed manholes throughout the 3-year warranty period as described in Article 1.06.
5. If the inspections indicate a failure of 10 percent or greater surface area of the corrosion barrier coating, the Contractor shall be responsible for the application of an additional corrosion barrier coating layer matching the thickness specified herein with no additional charge to the Town. Failure will be deemed to have occurred if the protective coating fails to:
   a. prevent active infiltration into the structure
   b. prevent the internal damage or corrosion of the structure
   c. protect the substrate and environment from contamination by effluent
6. The municipal sewer system may be put back into non-severe operational service as soon as the post-construction inspection has taken place. However, for severe corrosion duty such as high concentrations of acids, bases or solvents, 3 to 7 days and/or force cure by heat induction to the coated surfaces may be necessary prior to returning to service. Consult coating manufacturer for further details.

PART 4 - FIGURES

Not Used.

END OF SECTION 02738

SECTION 02739 - SUBMERSIBLE LIFT STATION

PART 1 - GENERAL

1.01 Summary

A. Section Includes: The installation of submersible lift station with non-clog centrifugal pumps as shown in the Standard Details including pumps, motor, base elbow, hatches with safety grating, slide rails, wet well and valve vault, controls, piping and valves, and other appurtenances.

B. Developer or Contractor shall be responsible for all costs associated with abandonment or relocation of an existing lift station.

1.02 General and Design Requirements

A. This section pertains to the requirement for sanitary sewer lift stations designed and constructed by a Developer or Contractor.

B. The Developer must show that it is not physically possible or economically feasible to provide gravity service into a public sewer. No lift station shall be approved for a project unless a 50-year life cycle analysis is submitted to the Town to demonstrate that it will be more cost effective for the Town in lieu of constructing a deeper gravity sewer.

C. All sewage lift stations that are connected to the Town of Brownsburg collection system must be approved by the Indiana Department of Environmental Management (IDEM) and by the Town of Brownsburg. The lift station must meet the requirements of this Section and the Standard Details.

D. Any exceptions to this Standard or associated approved Plans shall be submitted in writing and clearly stated. The exceptions must be approved by the Town prior to proceeding with the work.

E. All components of the lift station that are exposed to weather shall be constructed of material that is resistant to corrosion and will not require surface protection throughout the expected life of the lift station. In general, these materials are stainless steel, aluminum, fiberglass reinforced polyester (FRP) and ultraviolet stabilized PVC.

F. Inlet piping shall be located such that the sewage discharging into the wet well does not fall directly onto one or both of the submersible pumps.

G. All lift stations shall be designed and constructed in accordance with IDEM and Ten States Standards. All design criteria and calculations shall be submitted to the Town for approval.

H. Lift Station pumps shall be provided to accommodate peak hourly flow with the largest pump out of service. A minimum of two (2) pumps shall be provided at each lift station.

I. Force mains shall be designed to maintain a minimum of 2 feet per second in order to avoid solids deposition in the pipe. Minimum force main size shall be 4-inches in diameter unless specifically authorized by the Town.

J. Service and replacement parts for all components of the lift station must be readily available in the local Indianapolis area within 40 miles of the Town of Brownsburg.

K. The wet well is a Class 1, Division 1, Groups C and D environment. All components installed in the wet well shall be rated accordingly.

L. Lift Station Location

1. Locate the lift station in such a manner that it is accessible by means of a paved surface (street grade) with parking area for 2 service vehicles without obstructing any adjacent sidewalks or streets. Drive shall provide adequate access for a vacuum truck. Layout must be approved at Tech Review.
2. Landscaping/fencing may be required in locations where visual qualities are a consideration or for safety and equipment protection. Guidelines for landscaping around lift stations are available from the Town. A landscaping plan shall be submitted to the Town at Tech Review.
3. Provide access in the area surrounding the lift station for possible future maintenance purposes and the futue addition of a second wet well. Provide a minimum area of 1,200 square feet. Future additional wet well should be able to be installed without interruption of original wet well. Site layout shall include site of future wet well. Show utility easement on the Plans.
4. The lift station site shall be located above the 100-year flood elevation as established by IDEM and DNR.

M. Lift Station Design

1. Lift stations shall be wet well/valve vault design utilizing submersible pumps in the wet well with a separate valve vault. Provisions for draining the valve vault into the wet well shall be made.
2. Provisions shall be made for connection to the Town's portable generators in the event of a power failure.

N. Wet Well Sizing Criteria

1. The wet well storage below the lowest inlet shall be a minimum of 5'-0" and shall also meet the following criteria:
   a. OFF level to be set at the pump manufacturer's recommended level but no less than 1'-0" from the bottom of the wet well.

b. The distance between the OFF level and the lead pump ON level shall be set to provide storage capacity in gallons equal to:

$$\frac{15 \times \text{Rated Pump GPM}}{4} \quad \text{(i.e. 15 minute cycle minimum)}$$

c. The lag pump ON level shall be set a minimum of 6 inches above the lead pump ON level. Lag pump shall have a time delay relay, adjustable from 0 to 60 seconds.
d. The high water alarm shall be set a minimum of 6 inches above the lag pump ON level.
e. All level settings shall be set a minimum of 6 inches below the lowest invert elevation into the wet well.
f. All multitrode level set points shall be set below the lowest inlet into the wet well.

1.03 Quality Assurance

A. Standardization - All equipment shall be of the latest and most modern design. All similar components shall be manufactured and furnished by one manufacturer unless specifically allowed otherwise in writing by the Town.

B. Provide manufacturer's warranty as specified in this Section.

C. Provide field test results in Start-Up Certification Report as specified in this section.

D. The pumping equipment, controls, and accessories shall be an integral package supplied by a pump supplier with local representation so as to provide undivided responsibility.

1.04 Submittals

A. Submit the following to the Town for review:

1. Certified copies of factory tests and reports, if specified in this Section or required by the referenced standards.
2. Descriptive information including catalogue cuts and manufacturer’s specifications for all components.
3. Copy of manufacturer's standard warranty for each type of equipment provided.
4. Shop drawings with performance data, descriptive literature, weights and dimensions, and other physical characteristics verifying compliance with this Section including certified pump curves, motor starting and full-load amps, and motor horsepower and data, and other specific pump information. When numerous options and sizes are shown, the shop drawings shall be marked to clearly indicate the size and types specific to this Section and project.
5. Electrical:
   a. Submit all electrical requirements for each piece of equipment including voltage, phase, and load data.

b. Provide wiring diagrams for each piece of equipment. For example, submitting one diagram for all pumps is not acceptable.
c. “Typical” diagrams are not acceptable. Manufacturer’s standard diagrams may be submitted if they are made specific for this project by:
   1) Showing all included options, special items, etc.
   2) Unused options or features shall be crossed out or deleted.
   3) Identify the drawing with project name, equipment name, and tag number, e.g., “Brownsburg, “XXX” Lift Station Pump No. 1”
d. Telemetry plan

6. A material list indicating items to be furnished by the equipment manufacturer.
7. List of which components and materials shall be shipped preassembled and parts list for the other components and materials. Weights and physical dimensions shall be indicated for each part, assembly, and/or package to be shipped.
8. Manufacturer's installation instructions and recommended testing procedures.
9. Material Safety Data Sheets (MSDS) for any and all oils or chemicals utilized for lift station operation and maintenance.
10. Provide start-up certification report specified in this Section.
11. Operation and Maintenance Manuals
    a. Three (3) hard-copy Operation and Maintenance Manuals, and three (3) book-marked, pdf copies on CD or DVD, for all components of the lift station.
    b. Manuals shall include, at a minimum:
       1) Operation Instructions
       2) Maintenance Instructions and Schedule
       3) Recommended Spare Parts List
       4) Lubrication Schedules
       5) Structural Diagrams
       6) As-built Wiring Diagrams
       7) Bill of Materials

1.05 Warranty

A. Equipment and installation warranties shall comply with the warranty requirements specified in the General Conditions.

B. The manufacturer of the equipment furnished under this Section shall be responsible for the proper operation of the system when installed according to his instructions.

C. Pump warranty shall be provided by the pump manufacturer and shall warrant the units being supplied to the Town against defects in workmanship and materials for a period of five (5) years prorated from the start-up date. The warranty shall be in printed form and apply to all similar units. A copy of the warranty statement shall be submitted with the shop drawings.

D. All Work shall be warranted by the Developer and Contractor to be free from defective material and workmanship for a period of one year from the date of

acceptance of the lift station by the Town. Replace defective materials, components, and workmanship during this time, including but not limited to all materials, labor, shipping, and transportation, at no cost to the Town. Warranty work performed during this one year period shall also be warranted to be free from defective material or workmanship for a period of one year from the date the warranty work is completed and shall be addressed in the same manner at no additional cost to the Town.

1.06 Spare Parts and Special Tools

A. The manufacturer shall furnish one set of all special tools necessary for normal operation, maintenance and calibration.

B. Provide all manufacturer's recommended spare parts for each unit, as well as any spare parts identified in this specification section or the special requirements. As a minimum, a spare O-Ring Kit package shall be supplied with each pump.

1.07 Product Delivery, Storage and Handling

A. The Contractor shall be responsible for the delivery, storage, and handling of products. Store products in accordance with the manufacturer's recommended procedures.

B. Load and unload all pumps, motors, and appurtenances by hoists or skidding. Do no drop products. Do not skid or roll products on or against other products. Attach slings and hooks in such a manner to prevent damage to products.

C. The pumps furnished shall be packaged in such a manner as to provide ample protection from damage during handling, shipment, and outdoor storage at the station site. All openings shall be capped with dustproof closures and all edges sealed or taped to provide a dust-tight closure.

D. Promptly remove damaged products from the job site. Replace damaged products with undamaged products.

PART 2 - PRODUCTS

2.01 Submersible Non-Clog Pumps

A. Requirements

1. Provide two (2) identical centrifugal, submersible, solids handling, non-clog design pumps capable of handling 3-inch sphere solids, fibrous materials, sludge, and other typical solids. The pumps shall have the characteristics indicated on the Data Sheet. Pumps shall meet the requirements of HI Standards.

2. Pumps shall be manufactured by Xylem/Flygt Corporation or Hydromatic Pump Company. All other pump manufacturers require preapproval by the Town of Brownsburg.
3. Pumps shall be equipped with submersible cable suitable for submersible pump applications of length necessary from each pump to its respective remote control panel (RCP). The power cable shall be sized according to NEC and ICEA standards and also meet with P-MSHA approval.
4. The pumps shall be supplied with mating cast iron discharge connections as indicated on the Data Sheet.

B. Pump Design

1. The pumps shall be automatically and firmly connected to the discharge connection, guided by no less than two guide bars extending from the top of the station to the discharge connection. There shall be no need for personnel to enter the wet-well.
2. Sealing of the pumping unit to the discharge connection shall be accomplished by a machined metal to metal watertight contact. Sealing of the discharge interface with a diaphragm, o-ring or profile gasket is not acceptable. No portion of the pump shall bear directly on the sump floor.

C. Pump Construction

1. Each pump shall be a centrifugal, non-clog, solids handling, submersible, wastewater type. The pump volute, motor and seal housing shall be high quality gray cast iron, ASTM A-48, Class 30 or 35B. The pump discharge shall be fitted with an ASA 125 lb. flange, faced and drilled of a size listed in the Data Sheet. All external mating parts shall be machined and Buna N Rubber O-ring sealed on a beveled edge. All fasteners exposed to the pumped liquids shall be 300 series stainless steel.

D. Electrical Power Cord

1. Electrical power cord shall be SOOW, water resistant 600V, 90ºC., UL and CSA approved and applied dependent on amp draw for size, of sufficient length to extend from the pumps to the remote control panel (RCP) without splices.
2. The pump shall be triple protected with a compression fitting and two epoxy potted areas at the power cord entry to the pump. A separation between the junction box area of the pump and the motor by a stator lead sealing gland or terminal board shall not be acceptable.
3. This power cable entry into the cord cap assembly shall first be made with a compression fitting. Each individual lead shall be stripped down to bare wire at staggered intervals, and each strand shall be individually separated. The area of the cord cap shall then be filled with an epoxy compound potting which will prevent water contamination to gain entry even in the event of wicking or capillary attraction.
4. The power cord leads shall then be connected to the motor leads with extra heavy connectors having brass inserts with a screwed wire to wire connection, rather than a terminal board that allows for possible leaks.

5. The connection box wiring shall be separated from the motor housing wiring by stripping each lead down to bare wire, at staggered intervals, and separating each strand. This area shall be filled with an epoxy compound potting. Fiberglass terminal boards which are subject to heat fatigue and cracking, and which may lead to possible leaks shall not be acceptable.
6. The cord cap assembly where bolted to the connection box assembly and the connection box assembly where bolted to the motor housing shall each be sealed with a Buna N Rubber O-ring on a beveled edge to assure proper sealing.

E. Motor

1. Provide 460 volt, 3-phase electric motors of premium efficiency. Electric motors shall operate with a service factor of 1.15.
2. Provide solid state motor starters designed for both soft start and soft stop capability for motors over 10 horsepower.
3. The stator, rotor and bearings shall be mounted in a sealed submersible type housing. The stator windings and stator leads shall have Class F insulation (155°C) and a dielectric oil filled or air-filled motor, NEMA B design. Further protection shall be provided by on winding thermal sensors. The pump and motor shall be specifically designed so that they may be operated partially or completely submerged in the liquid being pumped. The pump shall not require cooling water jackets. Water jackets for supplemental cooling are not acceptable.
4. Stators shall be securely held in place with a removable end ring and threaded fasteners so they may be easily removed in the field without the use of heat or a press. Stator held by a heat shrink fit are not acceptable. Stators must be capable of being repaired or rewound by a local motor service station. Units which require service only by the factory shall not be acceptable. No special tools shall be required for pump and motor disassembly.
5. Pump shall be equipped with two heat sensors. The heat sensors shall be a low resistance, bi-metal discs that are temperature sensitive. They shall be mounted directly in the stator windings and sized to open at 120ºC and automatically reset at 30-35ºC differential. The sensors shall be connected in series with the motor starter coil so that the starter is tripped if a heat sensor opens. The motor starter shall be equipped with 3 leg overload heaters so all normal overloads are protected by external heater block.

F. Bearings and Shaft

1. An upper radial bearing and a lower thrust bearing shall be required. The upper radial bearing shall have minimum B-10 life at the specified condition of 10,000 hours and the lower thrust bearing shall have a minimum B-10 life at the specified condition of 10,000 hours. Bearings shall be locally available.
2. The shaft shall be 416 or 431 stainless steel and be a design which is of large diameter with minimum overhang to reduce shaft deflection and prolong bearing life.

G. Seals

1. The pump shall have two mechanical seals, mounted in tandem, with an oil chamber between the seals. The lower primary seal unit located between the pump and the lubricant chamber shall contain one stationary and one positively driven rotating tungsten-carbide ring. The upper secondary seal unit located between the lubricant chamber and the motor housing shall contain one stationary ceramic seal ring and one positively driven rotating carbon seal ring. The lower seal shall be replaceable without disassembly of the seal chamber and without the use of special tools. Pump-out vanes shall be present on the backside of the impeller to keep contaminates out of the seal area. Replacement seals shall be locally available.
2. The pump shall be equipped with a 300 series stainless steel shaft sleeve under the lower seal for added protection to reduce costly shaft work in the event of seal failure. The sleeve shall be keyed to the shaft and use O-rings to prevent leakage under the sleeve. Units that do not include a stainless steel shaft sleeve shall not be considered equal or acceptable.
3. The pump shall be equipped with a seal leak detection probe and warning system. This shall be designed to alert maintenance personnel of lower seal failure without having to take the unit out of service for inspection or requiring access for checking seal chamber oil level and consistency.
4. There shall be an electric probe or seal failure sensor installed in the seal chamber between the two tandem mechanical seals. If the lower seal fails, contaminants which enter the seal chamber shall be detected by the sensor and send a signal to operate the specified warning device.
5. Units equipped with opposed mechanical seals are not acceptable.

H. Impeller

1. Impeller shall be of the two-vane, enclosed non-clogging design and have pump-out vanes on the front and backside of the impeller to prevent grit and other materials from collecting in the seal area. Single vane design impellers which cannot be easily trimmed and which do not maintain balance with wear causing shaft deflections and reducing seal and bearing life are not acceptable. Impeller shall not require coating. Because most impeller coatings do not remain beyond the very early life of the impeller, efficiency and other performance data submitted shall be based on performance with an uncoated impeller. Attempts to improve efficiency by coating impeller are not acceptable.
2. Impellers shall be dynamically balanced. The tolerance values shall be listed below according to the International Standard Organization grade 6.3 for rotors in rigid frames. The tolerance is to be split equally between the two balance planes which are the two impeller shrouds.

RPM	Tolerance
1750	.02 in. – oz./lb. of impeller weight
1150	.026 in. – oz./lb. of impeller weight
870	.03 in. – oz./lb. of impeller weight

3. The impeller shall be threaded shaft or tapered shaft and key driven. A 300 series stainless steel washer and impeller bolt shall utilized to secure the impeller to the shaft for both threaded and tapered shafts. Straight end shafts for attachment of the impeller shall not be acceptable.

I. Casing

1. The casing shall be of the end suction volute type having sufficient strength and thickness to withstand all stress and strain from service at full operating pressure and load. The casing shall be of the centerline discharge type equipped with an automatic pipe coupling arrangement for ease of installation and piping alignment. The design shall be such that the pumps will be automatically connected to the discharge piping when lowered into position with the guide rails. The casing shall be accurately machined and bored for register fits with the suction and casing covers.
2. A volute case wearing ring shall be provided to minimize impeller wear. The wear ring shall be alloy 230 brass ASTM B43, Teflon, or nitrile rubber coated steel. The wear ring shall be easily replaceable in the field. Wear rings of any other material are not acceptable.

J. Serviceability

The complete rotating assembly shall be capable of being removed from the volute without disturbing the suction piping, discharge piping and volute. The motor housing, seal housing with seal plate and impeller still attached to the shaft shall be capable of being lifted out of the volute case from the top as one assembly.

K. Spare Parts

1. Provide one complete set of spare parts including multitrode unit, electrical relays, timers, lights, and other electrical components as provided by pump manufacturer.

2.02 Concrete Wet Well and Valve Vault

A. The Contractor shall furnish and install a monolithic concrete or precast manhole type wet well as indicated on the Details. Pump and related equipment shall be installed and/or mounted as shown.

B. A concrete vault shall be furnished and installed to house the valves and appurtenances. Provide an aluminum access ladder in the valve vault as shown on the Details. Square valve vault structures shall conform to requirements of ASTM Specification C913 and C890. Valve vault shall be constructed same as described for manholes in specification Section 02730.

C. Circular precast wet well structures shall conform to requirements of ASTM Specification C478. Wet well shall be constructed same as described for manholes in specification Section 02730. Wet well shall be vacuum tested per specification Section 02732.

D. All pipe penetrations into wet well and valve vault shall be core drilled. Seal all pipe penetrations with link seal for a watertight connection.

E. Provide suitable ballast to prevent floatation in the event of high water tables.

F. Provide 2-inch diameter PVC drain from valve vault to wet well. Furnish with 2-inch flapper valve inside wet well to prevent drain back of wastewater into the valve vault.

G. Furnish valve vault with aluminum ladder.

H. The wet well interior walls and cover shall be coated to protect against infiltration and hydrogen sulfide corrosion. Provide the following materials:

1. Mainstay ML-72 microsilica cement mortar
2. Mainstay DS-5 epoxy coating

2.03 Pump Discharge Piping

A. Pump discharge piping within the wet well and valve vault shall be flanged ductile iron pipe conforming to the following requirements:

1. Pipe - ANSI A21.51 and AWWA C151 Class 50
2. Fittings - ANSI A21.1 and AWWA C110 Class 250.
3. Flanges - ANSI A21.15 with 1/8" thick neoprene gaskets
4. Coatings - Piping shall meet AWWA 21.4A and receive one coat bituminous paint inside and out, except exposed exterior surfaces which shall receive the following exterior coating system:
   a. Prime Coat – Organic Zinc-Rich Urethane, 1 coat, 2.5-3.5 mils DFT
   b. Finish Coat - Aliphatic Acrylic Polyurethane, 2 coats, 2.0-5.0 mils DFT – Color to be determined by the Town.
5. Nuts - ANSI B18.2
6. Bolts - ASTM A307

B. Buried pump discharge piping shall conform to Specification Section 02731 – Force Main Sewer Systems.

C. Gate Valves

1. Provide resilient seated gate valves with mechanical joint ends conforming to AWWA C509 or AWWA C515. Valves shall be iron body with bronze stem nuts, glands and bushings, and shall be non-rising stem type with O-ring packing. Valves shall open counterclockwise (left) and have a 2-inch operating nut.
2. Provide buried valves with adjustable 5-inch diameter valve boxes with a minimum thickness of 3/16 inch, constructed so that the removable cover will not be thrown out by travel over it.
3. Provide cast iron, extension type valve boxes with slide or screw type adjustment to permit movement of the top section without transmitting forces onto the valve body.

4. Provide all valves boxes with a posi-cap or equivalent item for valve box stabilization and centering.
5. Covers for valve boxes on sewer service valves shall be marked "SEWER".

D. Plug Valves

1. Eccentric Plug Valves for wastewater service shall be non-lubricated with a resilient sealing surface. Valves located in the valve vault shall have flanged ends conforming to ANSI/AWWA C110 requirements. Port areas shall be at least 80% of full pipe area. Valves shall have permanently lubricated stainless steel slave-type bearings, or other lubricated type bearings, in the upper and lower stem journals. Valve seats shall be corrosion resistant, having a high nickel content.
2. Bonnet shaft seals shall be capable of being replaced while line and valve remain in service, thereby eliminating the need to take pumping station out of service. All exposed nuts, bolts, springs and washers shall be stainless steel. Means of actuation shall be by handwheel and geared actuator.
3. The valves shall be capable of providing drip-tight shutoff with flow in either direction up to the valve's rated operating pressure. Flanged valves shall be faced and drilled to ANSI B.16.1, Class 125 standard. Flanges of valves shall have face-to-face dimensions of ANSI/AWWA standard gate valves.
4. The plug face material shall be nitrile-butadiene, Neoprene or as approved by the Town.
5. Each actuator shall be capable of seating and unseating the valve and have a maximum torque 50 foot-pounds.
6. Valves shall be DeZurik; Val-Matic; or equal.

E. Check Valves

1. Check valves for wastewater service in sizes 4 inches and larger shall be the single disc, swing check design, outside weight and lever, non-slam, cast iron ASTM A-126, Class B body and bonnet, bronze seat ring and disk plate, bolted cover, flanged ends, 175 psig working pressure. Valves of 4-inch diameter shall have bronze disk. Valves larger than 4 inches shall have ductile iron or cast iron disk in accordance with ASTM B536 or ASTM A126 Class B. Hinge pin shall be 316 stainless steel. Check valves shall meet or exceed ANSI/AWWA C508 and be suitable for use in a horizontal position. Flanges shall conform in dimensions and drilling to ANSI B16.1. Check valves shall be Clow, M&H, or equal.

2.04 Accessories

A. Aluminum Hatches

1. Frame shall be 1/4-inch extruded aluminum with built-in neoprene cushion and with strap anchors bolted to exterior. Cover leaf shall be 1/4-inch aluminum reinforced with aluminum stiffeners as required. Stainless steel hinges shall be bolted to underside and pivot on all stainless bolts and hardware shall be used. The cover shall open to 90 degrees and lock automatically in that position. A vinyl grip handle shall be provided to release

and close the cover with one hand. Covers shall be built to withstand a live load of 300 pounds per square foot, and equipped with a snap lock and removable handle. When closed, covers shall not protrude above the operating surface in which they are installed. Factory finish shall be aluminum lacquer. Surface contacting concrete shall have bituminous coating. Covers shall be diamond pattern plate. Aluminum hatches shall be Bilco, USEMCO, USF, Halliday, or approved equal.

2. Provide wet well and valve vault hatch doors which are aluminum single leaf access hatches with locking hasp. Hatch doors shall have lifting handles, safety latch, hasp for padlock, and nonskid surface finish. All hatch doors shall have spring-assist and anti-slam device.
3. Wet well hatches shall be sized and provided by the pump manufacturer specifically for the submersible pumps provided, and shall not contain intermediate support bars across the clear opening.
4. When flush mounted covers are furnished, provide two wrenches at each lift station for opening covers.
5. Safety Grating
   a. Safety grating shall be furnished integral with the hatch for the wet well to prevent falling into the pit when the hatch lids are opened. The wet well access hatch shall be equipped with a safety grating panel under each hatch leaf. Each safety grating panel shall be molded in one piece. The grating shall be designed to withstand a minimum live load of 300 psf. Deflection shall not exceed 1/150th of the span.
   b. Grate openings shall allow for visual inspection, limited maintenance, and float adjustments while the safety grate is closed. The design of the hatch must assure that the grate is closed prior to the hatch doors being closed.
   c. Each grate shall be equipped with torsion rod lift assistance for ease of operation and a hold open arm shall be included which will lock the grate in the 90° position once opened. Hold open arm shall be aluminum with a stainless steel release handle. All other hardware included shall be Type 316 stainless steel. The grate shall be coated with a high visibility safety color coating.
   d. Design of the system must assure fall-through protection is in place after the door has been closed, thereby protecting the next operator.
   e. The opening arm shall be equipped with a controlled confined space entry locking device that will prevent unauthorized entry to the confined space.
   f. The safety grating shall be furnished by the same manufacturer as the aluminum hatch to assure compatibility.

B. Slide Rail System

1. A slide rail system shall be provided for easy removal of the pump and motor assembly for inspection and service. The system shall not require a man to enter the wet well to remove the pump and motor assembly.
2. Two (2) rails of two (2) inch stainless steel pipe shall be provided for each pump. The guide rails shall be positioned and supported by the pump mounting base. The guide rails shall be aligned vertically and supported at the top by attachment to the access hatch frame.

3. "I" beam sections of fabricated fiberglass may be provided in lieu of guide rails.
4. One (1) intermediate guide rail support is required for each ten (10) feet of guide rail length for stainless steel pipe.
5. The pumps shall be equipped with sliding brackets or rail guides. To insure easy removal of the pumps, the rail guides attached to each pump shall not encircle the rails.
6. The rails and the rail guides shall function to allow the complete weight of the pumping unit to be lifted on dead center without binding and stressing the pump housing. The rail system shall function to automatically align the pumping unit to the discharge connection by a simple downward movement of the pump. No twisting or angle approach will be considered acceptable.

C. Portable Hoist

1. Furnish and install for each pump station (1) portable hoist along with a winch, cable, and hook capable of lifting one pump. The hoist and associated lifting equipment shall have a minimum capacity of 120% of the weight of one pump. One (1) hoist shall be provided to be used for all pumps provided.
2. Provide stainless steel lift chains which shall allow removal of the pump(s) without entering the wet well.
3. A surface-mounted socket shall be provided and anchored into the top of the concrete slab over the wet well for each pump as shown on the Drawings. Any additionally reinforcing and appurtenances required to install the socket assembly shall be provided by the manufacturer or Contractor.
4. The hoist shall be provided with a pump lift gripper as a means to easily connect the hook, hoist the pump and disconnect the hook without needless intermediate reconnecting.

D. Cable Holder

1. Provide a stainless steel cable and chain holder to be mounted inside the hatch opening of the top slab of the wet well to support the pump power and control cables and lifting cable.

E. Safety

1. Provide safety device for confined space entry. Device shall be Unihoist Floor Mount model US100 and Unihoist Sleeve Cap model US106, or approved equal.

F. Hydrant

1. Provide 2-inch post type water hydrant with backflow prevention for potable water supply. Provide hydrant model TF200 or approve equal.

2.05 Electrical and Controls

A. All conduit from the wet well to control panels shall have conduits sealed where they enter the control panels to prevent gases from entering from the wet well The classification of the wet well is Class 1 Division 1 Group D.

B. Provide PVC Schedule 80 rigid conduit 18-inches above to 18-inches below grade,with PVC Schedule 40 conduit up to the all enclosures.

C. Include link type seals where conduits enter the wet well. Link Seal model #S-316 or equal.

D. Power conductors shall be type THWN-THHN: For dry and wet locations; max dry location operating temperature 90 Deg. C. Insulation shall be flame-retardant, moisture-resistant and heat-resistant thermoplastic; outer covering shall be nylon jacket. All conductors shall be copper.

E. All terminals shall be rated for copper conductors. Dual rated lugs shall be acceptable.

F. Provide a solidly grounded service ground electrode system. Include an equipment grounding conductor for all circuits.

G. Provide stainless steel Kellems-type grips to support all cables from the cable holder in the wet well.

H. Provide post mounted dusk to dawn electric light to provide light to entire wet well, valve vault, and parking area. Depending upon location, a motion detector type light may be used if preapproved by Town. Provide flip switch for light inside control panel.

I. Provide NEMA 4X stainless steel enclosure for enclosing electrical controls. Access door shall be capable of being secured shut and shall have an automatic heavy-duty hold-open with release handle to keep door open while maintenance is performed.

J. The manufacturer of the control systems shall be a UL listed shop for industrial control systems and shall provide evidence of such on request from the Town.

K. A circuit breaker and NEMA rated magnetic starter with three (3) leg overload protection and manual reset shall be provided for each pump. Motors 10 Hp and larger shall have Reduced Voltage Solid State Starters (soft starts). Starters shall have auxiliary contacts to operate both pumps on override condition. A separate circuit breaker shall be supplied for power to the control circuit. The control center shall include an extra circuit breaker of adequate size to provide 115 volt, single (1) phase to be used for all control functions. A green run light and H-O-A switch shall be provided for each pump. A terminal strip shall be provided to make field connections of pump power leads, float switches, seal sensor leads, heat sensor leads, and remote monitor panel interconnections.

L. Provide the following electrical and control components:

1. Separate elapsed time meters for each pump
2. Individual breaker for each pump in the control panel (lock-out/tag-out)
3. Pump moisture seal probe alarm
4. Telemetering interface connection capability
5. Thermostatically controlled electric strip heater for moisture control
6. Loss of phase monitor on each motor
7. Lightning surge protection
8. Duplex 110 volt, GFI, electric receptacle inside panel
9. Alternator selector switch
10. Heat sensor to indicate clogged pumps - connection shall disconnect starter upon high temperature signal and will automatically reconnect when condition has been corrected

M. Provide moisture and temperature sensing relays for all pumps and motors installed in the pump control enclosures. Provide wiring diagrams and directions on how the relays are to be connected to protect the pump and motor per the warranty requirements.

N. Provide audible and visual alarms with external silencer.

O. Provide non-corrosive multitrode level sensor unit in the wet well, with Type MTAK-1 mounting bracket.

P. Provide one back-up mercury-free float switch for a high water alarm.

Q. Furnish telemetry control equipment which is compatible with pumping equipment controls.

R. Alarm Monitoring Transceiver

1. Provide spread spectrum radio telemetry transceiver in a NEMA 4X stainless steel enclosure for operation on 120 VAC with battery back-up.
2. To monitor and transmit station status, alarms and analog information to the master transceiver above.
3. Each unit shall include:

Quantity	Description
3	AI (spare)
2	AO (spare)
12	DI (alarm and status inputs)
10	DO (spare)
1	NEMA 4X enclosure, 24 inches high, 20 inches wide, 8 inches deep with panel
1	Incoming control power terminal block circuit breaker, lightning arrestor, and EMI filter
1	Condensation Heater (25W) and Thermoswitch
1	15 (Set at 13.8)/24 VCD, 3 amp power supply; -03
1	7.0 AH gelled electrolyte battery
1	Bulletin D/E 1000, model SBC2-01 communications computer

1	Bulkhead coaxial cable lightning arrestor/installation kit
1	Microwave data systems (MDS) 9310 spread spectrum remote radio and modem
1	SCALA YP-900 YAGI directional antenna
1	100 feet of 1/2-inch Heljax low loss/foam core coaxial cable and connections
1	MDS 900 MHz radio kit

4. All telemetry equipment shall be compatible with current Town equipment.
5. Wire remote start/stop contacts directly to motor starter (shall not require operation of H-O-A switch in control panel or operation of a remote/local switch).
6. Provide remote silence of audible alarms upon acknowledgement by Town personnel through telemetry system.
7. All indicator lights shall be LED with a "push-to-test" feature.

S. Alarms are required for:

1. High wet well level
2. Pump #1 failure
3. Pump #2 failure
4. Loss of phase
5. Loss of power
6. Pump #1 seal failure
7. Pump #2 seal failure
8. Pump #1 high temperature
9. Pump #2 high temperature
10. High level alarm from float back-up

T. Provide engraved nameplates for all major devices and equipment. Include detailed instructions on the connection and transferring over to a portable generator. Identify and label all conductors with Brady style labels.

U. Final as-built drawings shall be attached to the inside of the front panel door. A list of all legends shall be included.

V. All component parts in the control panel shall be permanently marked and identified as they are indicated on the drawings. Marking shall be on the back plate adjacent to the component. All control conductors shall be identified with wire markers at each end as close as practical to the end of conductor.

W. All panels shall be tested to the power requirements as shown on the plans to assure proper operation of all the components. Each control function shall be activated to check for proper indication.

X. Furnish all hazard identifications such as "Confined Space" and "High Voltage - Authorized Personnel Only" posted signs.

Y. All control equipment shall be guaranteed for a period of three (3) years from the date shipment. The guarantee is effective against all defects in workmanship

and/or defective component. The warranty is limited to replacement or repair of the defective equipment.

2.06 Emergency Generator Connection

A. Furnish and install a manual transfer switch as shown on the Drawings and as specified herein. The manual transfer switch shall be Westinghouse MTSS, or approved equal, 2-pole, double throw, 100 amp, 600 volt, A.C., 60 hertz, NEMA 4X enclosure, with lockable devices (key lock), positive mechanical interlocking by means of a walking beam interlock, common load bus, solid neutral bar, auxiliary contact normal source, auxiliary contact for emergency source, indicating lights for each position.

B. Furnish and install an emergency generator receptacle as shown and described on the Drawings.

2.07 Identification Sign

A. Provide red plastic engraved identification sign that is 8-1/2 inches wide by 6 inches tall. Sign text shall be white in color and minimum 1/2-inch high letters in Arial Black font. Coordinate sign text and lift station name with Town, e.g. "Town of Brownsburg Sewer Utility, XXX Lift Station, In Case of Emergency Call 317-852-1114, www.brownsburg.org".

2.08 Fencing

A. Provide a vinyl coated 6'-0" chain link fence with a #9 tension wire at the bottom of the fence.

B. Provide a 3'-0" pedestrian grate.

C. Provide a 6'-0" double gate for maintenance access. Cover a minimum width of 4'-0" with No. 11 crushed limestone with a minimum thickness of 8 inches.

PART 3 - EXECUTION

3.01 Installation

A. All equipment shall be installed in accordance with the manufacturer's published instructions, and in accordance with all state and local codes, ordinances and regulations.

B. Install control panel so that door opens to the south or east.

C. Install safety base on the concrete pad approximately 6.5 inches from the edge of the wet well hatch.

D. Terminate force main tracer wire in a manufactured test station box, Handley Industries model T4 or approved equal. Locate test station adjacent to lift station concrete pad.

E. Do not pour concrete pad until all conduits are installed.

F. Install multitrode unit so that it is easily accessible and removable from the wet well hatch.

G. Prepare wet well surface for coating and install coatings per manufacturer's recommendations. Coat wet well walls and inside of cover entirely.

1. Apply 1/2 inch of Mainstay ML-72 microsilica cement mortar directly on prepared surface (interior precast concrete wet well structure).
2. Apply 100 mils of Mainstay DS-5 epoxy coating over the microsilica cement mortar coating.

H. Coordinate with the Town to determine antenna placement location. Bury all cables for antenna in rigid conduit.

I. Secure seal failure cable to power cord with wire ties to keep together from the pump into the conduit to the control panel.

J. The Contractor shall adjust, lubricate and leave the pumping system in proper working condition. Wrap excess cable in a neat, orderly fashion within the wet well.

K. Contractor shall provide spare parts to the Town as described herein.

3.02 Backfill & Compaction

A. Backfill around wet well and around and under valve vault shall be compacted. Place fill in 6” to 8” maximum balanced lifts and compact each layer to 95% of Modified Proctor dry density in accordance with ASTM D-1557. Compaction of backfill shall be by hand tamping or approved mechanical tamping device. Perform compaction tests every two vertical feet and for every 100 square feet. Notify the Town twenty-four (24) hours prior to the tests so they may be present for the compaction tests. Employ and pay for the services of an independent testing laboratory to perform field density tests to ensure that proper compaction is obtained. Submit compaction test results to the Town.

3.03 Abandonment of Existing Lift Station

A. Remove all equipment, cap all piping, and remove structure and concrete pad to a minimum of 2 feet below finished grade.

B. Complete clean all structures. The Town shall inspect all structures prior to backfill.

C. Return all equipment to the Town.

3.04 Cleaning Up

A. Upon completion of work, the Contractor shall remove all construction equipment and temporary materials, and he shall also dispose of all rubbish and other unsightly debris caused by operations and shall leave the premises in as good or better condition than found.

B. Clean wet well via Vac-Truck prior to final inspection and acceptance by Town.

C. Clean lift station and all sewer lines of mud and gravel before testing of the lift station is performed.

3.05 Field Testing

A. Perform exfiltration testing for lift station wet well.

1. Plug all inlet lines before starting presoak period.
2. Presoak period shall be at least 4 hours.
3. Following presoak period, fill structure to a depth of 6 inches below the top structure joint.
4. Test period shall be 2 hours. A detectable leakage shall be corrected and retesting accomplished.

B. The manufacturer's representative shall perform a pumping test (utilizing water) of each new pump as soon as practical after the pumping equipment is installed. The Contractor is responsible for coordinating the testing of the pumps. The pumping test shall determine the capacity, discharge pressure, horsepower draw, and efficiency of each pumping unit under actual operating conditions. The duration of each pump test shall be at least ten (10) minutes of continuous operation. Include all as-installed test data and pump curves in Start-Up Certification Report.

C. Flow meters and pressure gauges installed as a part of the project shall be used to determine the pumping rates and pressures. The Contractor will not be required to install temporary flow meters and gauges for pump testing. Where flow meters are not provided, a wet-well draw down test shall be performed to verify pump performance.

D. Field testing shall be performed after discharge piping is installed and shall include the following:

1. The pump shall be visually inspected to confirm that it is built in accordance with specification as to horsepower, voltage, phase and hertz.
2. The motor seal and housing chambers shall be meggered for infinity to test for moisture content and/or insulation defects.
3. Pump shall be allowed to run dry to check for proper rotation.
4. Discharge piping shall be attached, the pump submerged in water, and amp readings shall be taken in each leg to check for an imbalanced stator winding. If there is a significant difference in readings, the stator windings

shall be checked with a bridge to determine if an unbalanced resistance exists. If so, the stator shall be replaced.

5. The pump shall be removed from the water, meggered again, dried and the motor housing filled with dielectric oil.

E. Defects in the new equipment or failure to meet the specified performance shall be corrected by the Contractor. The Town reserves the right to reject the pump if the Contractor fails or refuses to make the corrections required to meet the specified performance; or the improved pumping units, when tested, fail to meet the specified performance.

3.06 Manufacturer's Service and Start-Up Certification Report

A. Notify the Town a 72 hours in advance (not including weekends or holidays) of start-up operation.

B. The Contractor shall provide the services of a qualified representative of the pump manufacturer for a minimum of one day per pump station to perform the following tasks:

1. Inspect the installation of the equipment.
2. Place the equipment in operation and make any necessary adjustments.
3. Perform Field Tests specified above.
4. Perform tests specified in this Section and recommended by the equipment manufacturer.
5. Instruct Town 's personnel in the proper operation and maintenance (O&M) of the equipment (8 hours of training).

C. If equipment is not completed for proper start-up and training procedures, the representative shall reschedule another visit at no additional cost to the Town. Training will not be permitted without proper start-up and testing tasks. An abstract or outline of the start-up, testing, and training procedures shall be provided to the Town at least 5 days prior to the scheduled visit. Manufacturer's operation and maintenance manuals and materials shall be incorporated in the training procedures, with emphasis on items or materials of greatest importance.

D. A typed, bound report covering the manufacturer's representative's findings shall be submitted to the Wastewater Superintendent of the Town of Brownsburg for review and approval. The report shall (1) describe the start-up procedures taken; (2) include any inspections performed; (3) outline in detail any deficiencies observed along with the corrective measures taken; and (4) include the results of all field tests, including necessary graphs, charts, tables, etc., specified in this Section or required by the referenced standards. The report shall certify that the equipment is properly installed and functioning for the purpose intended. The report must be received and reviewed by the Town prior to the equipment being put into permanent operation.

E. The Contractor shall bear all expenses associated with the start-up, testing, and training procedures and report described above, including labor, transportation, lodging, and material costs.

DATA SHEET

SUBMERSIBLE NON-CLOG CENTRIFUGAL PUMPS

A. Raw Sewage Pumps

1. TITLE: _____
2. LOCATION: _____
3. QUANTITY: _____
4. OPERATING CONDITONS: The pumps shall operate within the entire pumping range specified without cavitation and exceeding the vibration limits established by the Hydraulic Institute.

   a. Material to be Pumped: Raw sewage within temperature range of 33°- 80°F.

   b. Pump Curve:

Condition	Discharge Rate	TDH	Overall Efficiency
Minimum Discharge	gpm	ft	%
Design Point	gpm	ft	%
Maximum Discharge	gpm	ft	%

5. SPECIFICATIONS:

   a. Type: Submersible
   b. Minimum Sphere Diameter: 3-inch
   c. Pump Speed: _____ rpm
   d. Discharge Connection: ____ inches
   e. Impeller Material: _____
   f. Impeller Diameter: ____ inches
   g. Motor Data:
      1) Horsepower: _____ hp
      2) Speed: _____ rpm
      3) Voltage: 460
      4) Phase: 3
      5) Hertz: 60
      6) Service Factor: 1.15

6. MANUFACTURERS: Hydromatic or Flygt

PART 4 - FIGURES

4.01 Associated Standard Details

Detail No.	Description
WW-05	Lift Station Site Layout
WW-06	Lift Station Plan – At Grade
WW-07	Lift Station Plan – Sub-Grade
WW-08	Lift Station Section A-A
WW-09	Lift Station Section B-B
WW-10	Lift Station Electrical Equipment
WW-11	Lift Station One-Line Diagram

END OF SECTION 02739

SECTION 02960 - BIORETENTION

PART 1 - GENERAL

1.01 Summary

A. Section Includes: Furnishing and installing all stone, soil mixtures, plants, mulch, structures, and pipe required for bioretention area facilities as shown on the Drawings and as specified.

B. Related Sections

1. Section 02101 - Erosion and Sediment Control and Stormwater Pollution Prevention
2. Section 02220 - Trenching, Backfilling, & Compaction
3. Section 02720 - Storm Sewer Systems

1.02 References

A. American National Standards Institute (ANSI), latest editions

1. ANSI Z60.1 - American Standard for Nursery Stock

B. American Society for Testing and Materials (ASTM), latest editions

1. ASTM C76 - Standard Specification for Reinforced Concrete Culvert, Storm Drain, and Sewer Pipe
2. ASTM D422 - Standard Test Method for Particle-Size Analysis of Soils

C. Hendricks County Stormwater Management Handbook, latest edition

D. Indiana Department of Transportation (INDOT) Standard Specifications, latest edition

1. Section 904 - Aggregates
2. Section 907 - Concrete, Clay, and Plastic Drainage Components

1.03 Submittals

A. Product Data

1. Gradation analysis of stone from supplier for each type of gravel and riprap
2. Plant list stating botanical and common name
3. Yard inlet
4. Overflow pipe

B. Soil Testing

1. Soil mixtures shall be tested prior to installation. No material shall be added to the planting soil stockpile after the soil has been tested.

2. Provide sieve analysis, PH test results, and organic matter test results for each bioretention area.
3. All testing shall be performed at the same testing facility. Provide testing facility name, address, contact person, phone number, and email address.

1.04 Quality Assurance

A. Provide plants grown in a recognized nursery in accordance with good horticultural practice. Provide healthy, vigorous stock free of disease, insects, eggs, larvae, and defects such as sun-scald, injuries, abrasions, or disfigurement.

B. Provide plants of sizes shown or specified. Plants of larger size may be used if sizes of roots or balls are increased proportionately.

C. Town reserves right to inspect trees and shrubs either at place of growth or at site before planting, for compliance with requirements for name, variety, size, and quality.

1.05 Delivery, Storage, and Handling

A. Acceptance at Site

1. Damaged plants and materials will not be accepted. Promptly remove damaged plants and materials from the job site. Replace damaged plants and materials with undamaged items at no additional cost to the Town.

B. Storage and Protection

1. Protect soil to be used in bioretention area from all sources of additional moisture during conveyance and at the project site until incorporated into the Work.
2. Keep root stock of plant material moist during transport and storage.
3. Protect plants and materials from damage and deterioration during delivery and storage at the site.

1.06 Sequencing

A. Complete site elevation grading and stabilize all disturbed soils within the drainage areas of the proposed bioretention areas. Do not perform bioretention area excavation and construction until the drainage area is fully stabilized.

1.07 Warranty

A. Refill and restore to the original grade any settlement in the bioretention area soil medium which takes place within one year at no additional cost to the Town. Restore the surface area where settlement has occurred including, but not limited to, installing seed, mulch, and erosion control measures.

B. A 3-year maintenance agreement is required. The Owner shall be responsible for landscaping maintenance including removal of trash, debris, dead vegetation, and sediments; watering; weeding; and mulching.

C. Remove and replace any plantings which have been damaged or destroyed within the 3-year maintenance period at no additional cost to the Town.

PART 2 - PRODUCTS

2.01 Gravel Dry Well

A. No. 8 Washed Gravel

1. Provide well graded INDOT classification No. 8 washed gravel with a maximum diameter of 1 inch.

B. Pea Gravel

1. Provide washed, river-run, round diameter pea gravel with a maximum diameter of 1/2 inch.

2.02 Soil Medium

A. Soil medium shall be a uniform mix, free of brush, seeds, noxious weeds, stones, stumps, roots, or other material over 1-inch diameter. No materials or substances shall be mixed or dumped within the bioretention area that may be harmful to plant growth or prove a hindrance to the planting or maintenance operations.

B. Provide a sandy loam planting soil mix in accordance with the following:

Item	Criteria	Reference
Clay (less than 0.002 mm) content	Less than 5 percent	ASTM D422
Silt (0.050 to 0.002 mm) content	0 to 10 percent	ASTM D422
Sand (1.0 to 0.050 mm) content	50 to 60 percent	ASTM D422
Leaf compost or aged leaf mulch	20 to 30 percent	
High quality topsoil	20 to 30 percent	
PH Range	5.5 to 6.5	
Organic matter	1.5 to 3.0 percent	

2.03 Topsoil

A. Refer to Section 02101 - Erosion and Sediment Control and Stormwater Pollution Prevention.

2.04 Mulch

A. Provide organic double-shredded hardwood bark mulch.

B. Mulch shall be well aged, uniform in color, and free of weeds and foreign materials. Well aged mulch shall be defined as mulch that has been stockpiled or stored for at least 12 months.

2.05 Plants

A. Provide plants native to the area, complying with the recommendations and requirements of ANSI Z60.1 and as specified.

B. Provide container grown plants of #SP1 container class or larger (1-inch plugs, minimum 6.5 cubic inches) in accordance with ANSI Z60.1.

C. Plants shall be healthy, vigorous, well-rooted, and established in the container in which they are growing. A container grown plant shall have a well-established root system reaching the sides of the container to maintain a firm root ball, but shall not have excessive root growth encircling the inside of the container.

2.06 Riprap

A. Provide Revetment riprap, graded in accordance with INDOT 904.

2.07 Geotextile

A. Refer to Section 02101 - Erosion and Sediment Control and Stormwater Pollution Prevention.

2.08 Overflow Pipe and Yard Inlet

A. Provide pipe and yard inlet in accordance with Section 02720 - Storm Sewer Systems.

PART 3 - EXECUTION

3.01 Preparation

A. Clearly mark bioretention areas before any site work begins. Avoid soil disturbance and compaction within the bioretention areas.

B. Provide erosion and sedimentation control protection on the site such that construction runoff is directed away from the proposed bioretention area locations.

C. Prevent stormwater runoff from entering the bioretention area until authorization is given by the Town.

3.02 Installation

A. Bioretention Areas

1. Excavate bioretention areas to the proposed depths and elevations as shown on the Drawings. Manually scarify the existing soil surface to a minimum depth of 3 inches.
2. Do not compact in-situ soils. Heavy equipment shall not be permitted within the bioretention area areas.
3. Backfill the excavated area as soon as the subgrade preparation is complete to avoid accumulation of debris. Properly dispose of excess subsoil removed from excavations.
4. Do not place soil medium if material is excessively wet or frozen. Saturated or frozen condition shall be in the opinion of the Town.
5. Place soil medium in 12-inch lifts without compaction. Overfilling will be necessary to account for settlement.
6. Consolidate soil medium with water in a controlled manner, without creating any scour or erosion, to at least 1 inch of ponding depth. Perform water consolidation soil at least 24 hours prior to final grading and landscaping. Allowing uncontrolled runoff from adjacent impervious areas to enter bioretention area is not acceptable.
7. After water consolidation, complete final grading within 2 inches of the proposed design elevations, leaving space for top dressing of mulch.
8. Seed and plant vegetation as indicated on the Drawings. Plantings shall be installed on 12-inch centers with triangular spacing. Make minor adjustments as requested at no additional cost to the Town. Plant during the proper time and under the proper conditions for the particular plant.
9. Place mulch to a uniform thickness of approximately 2 inches, and hand grade to final elevations.
10. Water bioretention area areas once per day beginning the first day plants are installed and continuing for 14 days after the final plant has been installed. Continue watering once per week or more often as necessary until substantial completion.
11. Fertilizer and pesticides shall not be permitted within the bioretention area areas.

B. Overflow Pipe and Accessories

1. Lay storm sewer pipe uniformly to line and grade so that finished storm sewer will present a uniform conduit.
2. Set line and grade by means of laser beam and target for alignment and grade.
3. Lay storm sewer pipe progressively upgrade in a manner to form close, concentric joints with smooth bottom inverts.
4. Maintain 18 inches of vertical separation and 10 feet of horizontal separation between new storm sewer and new or existing water mains unless otherwise directed. Notify Town immediately of all instances where separation cannot be maintained.
5. After joint is made, place sufficient bedding material along each side of the pipe to prevent conditions that might tend to move the pipe off line or grade.

6. Temporarily plug installed piping systems at end of each day's work or other interruption of progress on a given line. Plug shall be adequate to prevent entry of animals and entrance or insertion of deleterious materials and shall be installed in a manner satisfactory to the Town.
7. Securely attach fabricated branches for wyes and tees to wall of pipe in such a manner as to not restrict or otherwise interfere with flow characteristics of the pipe.
8. If any existing drainage tile systems are encountered during construction, reconstruct the tile to its original conditions or connect tile to the new storm drainage system as approved by the Town.

C. Overflow Yard Inlet and Accessories

1. Keep structure excavations free from water during construction.
2. Install yard inlet sections so that the axis of the structure is vertical.
3. Install gaskets for joints in accordance with the manufacturer's recommendations.
4. Unless otherwise indicated, set castings for all structures at finish grade level. Adjust castings to the satisfaction of the Town, at Contractor's expense.
5. Remove all debris and excess soil from structures after installation to the satisfaction of the Town.

3.03 Maintenance and Protection

A. Provide protection against traffic and construction operations by erecting barricades and warning signs immediately after bioretention area landscaping is completed.

B. If bioretention area areas are damaged or destroyed, the affected area shall be repaired or replaced to the satisfaction of the Town.

PART 4 - FIGURES

Not Used.

PART 5 - DESIGN EXAMPLE

5.01 Existing Site Conditions

Criteria	Value
Drainage Area, *A*	0.75 acres
Impervious Cover, *I*	35 percent
Soil Infiltration Rate, *r*	1.0 inches per hour
Depth to Water Table, d_w	6 feet

5.02 Design Constraints

Criteria	Value
Depth of Rainfall, *P*	1 inch
Time to Drain through Filter Bed, t_f	24 hours = 1 day
Filter Media Coefficient of Permeability, *k*	0.5 feet per day
Filter Bed Depth, d_f	4 feet
Max. Ponding Depth, d_p	6 inches = 0.5 feet
Avg. Height of Water above Filter Bed, h_f	3 inches = 0.25 feet

5.03 Suitability of Site for Bioretention Check

Criteria	Value
Soil Infiltration Rate > 0.5 inches per hour?	Yes
Filter Bed Depth < (Depth to Water Table - 2 feet)?	Yes
Time to Drain through Filter Bed < 4 days?	Yes

5.04 Volumetric Runoff Coefficient (R_v)

A. Per Chapter 9 of the Hendricks County Stormwater Management Handbook

$R_v = 0.05 + 0.009\,(I) = 0.05 + 0.009\,(35) = \underline{0.365}$

5.05 Water Quality Volume (WQ_v)

A. Per Chapter 9 of the Hendricks County Stormwater Management Handbook

$$WQ_v = \frac{(P)(R_v)(A)}{\left(12\frac{\text{in}}{\text{ft}}\right)} = \frac{(1\text{ in})(0.365)(0.75\text{ ac})}{\left(12\frac{\text{in}}{\text{ft}}\right)} = \underline{0.023\text{ acre-feet}} = \underline{994\text{ ft}^3}$$

5.06 Bioretention Ponding Area (A_f)

A. Using Darcy's Law

$$A_f = \frac{(WQ_v)\,(d_f)}{(k)\,(h_f + d_f)\,(t_f)} = \frac{(994\text{ ft}^3)(4\text{ ft})}{\left(0.5\,\frac{\text{ft}}{\text{day}}\right)(0.25\text{ ft} + 4.0\text{ ft})\,(1\text{ day})} = \underline{1{,}871\text{ ft}^2}$$

5.07 Bioretention Area Dimensions

A. Width, using a length-to-width ratio of 2:1

$$Width = \sqrt{\frac{A_f}{2}} = \sqrt{\frac{1{,}871\text{ ft}^2}{2}} = \underline{31\text{ ft}}$$

B. Length

$$Length = 2\,(W) = 2\,(31\text{ ft}) = \underline{62\text{ ft}}$$

5.08 Design Check

Criteria	Value
Width > 25 feet?	Yes
Length > 40 feet?	Yes

END OF SECTION 02960

SECTION 03500 – ROLLER COMPACTED CONCRETE PAVEMENTS (RCC)

PART 1 - GENERAL

1.01 General Items

A. This specification outlines the requirements for production and construction of Roller Compacted Concrete (RCC) pavement for Town streets. In addition to this specification, INDOT standard specifications, current edition, apply. Roller-Compacted Concrete (RCC) shall consist of aggregate, Portland cement, possibly other supplementary cementitious materials (fly ash, slag and silica fume) and water.

B. RCC shall be proportioned, mixed, placed, compacted and cured in accordance with these specifications; and conform to the lines, grades, thickness, and typical cross sections shown in the Plans or otherwise established by the Town.

1.02 Execution

A. This specification sets forth some requirements regarding materials to be employed and the manner in which the work is to be performed. This specification also sets forth results to be obtained. The Contractor shall comply with all requirements set forth in this specification.

1.03 Submittal Requirements

A. The Contractor shall submit the following to the Town at least 45 days before start of any production of RCC pavement:

1. Construction schedule for all RCC related operations.
2. Paving procedures describing direction of paving operations, paving widths, planned longitudinal and transverse cold joints and curing methods and patterns.
3. Certification for aggregate source, quality and sizing as required by the specification. Certification for Portland cement and supplementary cementitious materials as required by the specification.
4. Manufacturers' data and specifications including capacities for equipment to be used in mixing, hauling, placing and compacting RCC.
5. Layout of plant location showing mixing plant, cement and aggregate storage and water supply.
6. Proposed RCC Mix Design. If the proposed mix design is developed by the Contractor or there is a suggested change to the mix design, it must be submitted to the Town for approval at least forty five days prior to RCC construction. This mix design shall include details on aggregate gradation, cementitious materials, admixtures (if used), compressive and tensile strengths and required moisture and density to be achieved. All mix designs submitted shall be certified by a professional engineer, registered in the State of Indiana.

1.04 Materials

A. All materials to be used shall be from approved INDOT sources. Portland cement shall conform to the standard specification for Portland Cement Type I, ASTM C 150 (latest edition). Fly Ash shall conform to ASTM C 618 Class F. Ground Granulated Blast Furnace Slag (GGBFS): GGBFS, Portland Cement Concrete, chemical admixtures, and fine and course aggregates shall conform to INDOT specification sections 500 and 900. The aggregates shall be well graded to conform to the following composite gradation:

Sieve Size	**Percent Passing**
1”	100
¾”	95 – 100
½”	70 – 90
3/8”	60 - 85
#4	40 – 70
#16	20 – 40
#100	5 – 20
#200	2 – 8

B. Mixing water shall be clean, potable and free from oil, acid and strong alkalis or organic contents.

1.05 Mix Design

A. The Contractor/Supplier shall develop a RCC mixture proportioned in accordance with this specification and procedures discussed in ACI 325.10R-95 (Re-approved 2001) “Report on Roller-Compacted Concrete Pavements” sections 4.2, 4.3, and 4.4. Once the mix has been designed, certified test data shall be submitted from a recognized testing laboratory that shows the proposed mix design will meet the following requirements based on test results of the cores taken from a test section. Compressive Strength, Cores: 3500 psi @ 28 days. Splitting Tensile Strength, Cores: 350 psi @ 7 days. The minimum Portland cement content shall be 350 pounds per C.Y. Fly Ash and GGBFS may only be used between April 1 and November 1 unless otherwise authorized by the Town. Secondary Cementitious material shall not be considered as a substitute for any deficiency in the #100 sieve. Strength properties shall be based on field extracted cores.

1.06 Equipment

A. Mixing Plants

1. Mixing plants shall be of a design that can produce a RCC pavement mixture of the proportions defined in the approved mix design and within the specified tolerances in ASTM C 94 and ASTM C 685. The mixing plant may be a Central-Mix Drum or a Stationary Continuous-Mixing Twin-Shaft Pug Mill mixer. The plant shall have a minimum manufacturer’s rated capacity of 200 tons per hour.

B. Pavers

1. RCC shall be placed with a ***high-density RCC type paver*** subject to approval by the Town. The paver shall be capable of placing the RCC at a minimum of 85% of the maximum wet density in accordance with this specification. The paver shall be of suitable weight and stability to spread, consolidate, and finish the RCC material, without segregation to the required thickness, smoothness, cross-section and grade. Work in areas inaccessible to paving machines shall be placed by other methods approved by the Town. Any supplemental paving equipment such as graders and dozers must be approved by the Town prior to use. The equipment shall be capable of producing a finished product that results in a smooth, continuous surface without segregation, excessive tearing, or rock pockets.

C. Vibratory Rollers

1. Vibratory rollers shall be self-propelled, double drum, steel wheel vibratory rollers having a static weight of at least 10 tons. Each roller drum shall be equipped with a properly operating scraper and brush. The rollers shall transmit a dynamic impact to the surface through smooth steel drums by means of revolving weights, eccentric shafts or other equivalent methods. The roller drum shall be between 4 and 5-1/2 feet in diameter and 5-1/2 to 8 feet in width. Finish rollers shall be self-propelled, double drum, steel wheel rollers having a static weight of between 3 and 10 tons. Each drum shall be equipped with a properly operating scraper and brush. A single drum vibrator roller with vulcanized rubber tires may be utilized for finish rolling, at the approval of the Town. Walk-behind vibratory rollers or plate tampers shall be used for compacting areas inaccessible to the large rollers.

D. Dump Trucks

1. Dump Truck boxes shall be kept free of contaminants while hauling any RCC and shall have protective covers properly secured until discharge into the paver.

E. Water Trucks

1. At least one water truck, or other similar equipment, shall be on-site and available for use throughout the paving and curing process. Such equipment shall be capable of evenly applying a fine spray of water to the surface of the RCC without damaging the final surface.

1.07 Construction Requirements

A. Preparation of Sub-grade/Sub-base

1. Before RCC process begins, the area to be paved shall be graded and shaped to the lines and grades as shown in the Plans or as directed by the Town. During this process any unsuitable soil or material shall be removed and replaced with acceptable material. The subgrade shall be uniformly

compacted to a minimum of 95% of the maximum dry density in accordance with ASTM D 1557. The Contractor shall check for any soft or yielding subgrade areas by proof rolling with a loaded dump truck or pneumatic-tire roller over the entire area to be paved. All soft or yielding subgrade areas shall be corrected and made stable before RCC construction begins. If a subbase is shown on the Plans, it shall be uniformly compacted to a minimum of 95% of the maximum dry density in accordance with ASTM D 1557. Sub-grade shall conform to INDOT specification section 200. If required, construct a granular base according to INDOT specification section 300. Moisten the surface of the sub-grade or base without creating mud or ponding water, to minimize absorption of water from RCC mix to be deposited.

B. Transportation

1. Transport the RCC mixture to the site in dump trucks which meet the requirements of section 106 of this specification. The trucks shall dump directly into the hopper of the paver unless placement is by hand as directed by the Town. Hauling over the freshly placed RCC will not be permitted except in multi-lift operations to the extent required to dump the fresh RCC into the paver.

C. Placing RCC

1. Place RCC to the thickness, grade, and lines indicated in the plans. Achieve a minimum of 85% of the maximum wet density out of the paver and 98% of the maximum wet density after final rolling. No compacted lift thickness shall be in excess of ten (10) inches or less than four (4) inches for single or multiple-lift applications unless demonstrated by a test strip. Co-ordinate RCC delivery so the mix can be spread and rolled within the specified time limit and to ensure uniform progress of the paver until the paving operation is complete. The time between mixing and compacting shall not exceed ninety (90) minutes, for all RCC placed, provided that the temperature of the RCC does not exceed 90 degrees (F). Operate the paver in a manner that will prevent segregation and will produce a smooth continuous surface without tearing, pulling or shoving. If segregation occurs, suspend the paving operation until the cause is determined and corrected. Areas of segregated RCC shall be removed and replaced.
2. Placing of the RCC mix shall be done in a pattern so that the water from previously placed RCC will not affect the fresh surface or sub-grade. Scarify all areas that require broadcasting or fanning of RCC. The surface must be scarified at least one inch deep prior to broadcasting fresh RCC over the top. Broadcasting must be completed in the allotted time within these specifications.
3. For multiple-lift placement, the total pavement thickness shall be as specified on the plans. The second lift must be placed within sixty (60) minutes of the completion of the first lift. If more than sixty (60) minutes has elapsed, the interface between the first and second lifts shall be considered a cold joint and shall be installed as specified in Article 1.08-D.

D. Compaction

1. Achieve 85% of the maximum wet density, as determined in the laboratory according to ASTM D 1557, directly out of the paver and 98% of the maximum wet density after final rolling. The contractor shall begin compaction operations within fifteen (15) minutes after spreading of the RCC mix. Any additional delay will result in the coring of the affected area at the Contractors expense to ensure that it meets the requirements of this specification.

E. Rolling

1. The contractor shall establish a rolling pattern that will achieve the required density with a minimum number of roller passes. During vibratory compaction, the roller shall not be started, stopped, or left standing in vibratory mode. Stagger the stopping point of successive rolling passes to avoid forming depressions on the surface. The contractor shall continually check the RCC surface while still plastic to ensure surface and grade tolerances are met. Immediately correct excessive variations in accordance with the spreading requirements. The contractor shall remove any roller marks on the surface using a steel drum roller in static mode. Each lane edge shall be constructed with a face within 15-degree of vertical. The contractor shall spread RCC mix by hand in areas not accessible by the paver and compact to the requirements of Articles 1.06 and 1.07 of this specification.

F. Curing

1. Keep the RCC surface continuously moist by water, fog spray, wet burlap, an approved membrane-forming curing compound applied at 1.5 times the rate specified by the manufacturer, or polyethylene sheeting for a period of seven (7) days or until the core strengths have meet the requirements of Article 1.5 of this specification. Concrete curing compounds shall conform to ASTM C 309 or ASTM D 977.

G. Weather Limitation

1. RCC shall not be placed on any surface containing frost or frozen material. RCC shall only be placed when the ambient temperature is a minimum of 35F and rising. When the air temperature is expected to fall below 40°F (4°C), the Contractor must present to the Town a detailed proposal for protecting the RCC pavement. This proposal must be accepted by the Town before paving operations may be resumed. A sufficient supply of protective material such as insulating blankets, plastic sheeting, straw, burlap or other suitable material shall be provided by the Contractor at his expense. The methods and materials used shall be such that a minimum temperature of 40°F (4°C) at the pavement surface will be maintained for a minimum of five days. Approval of the Contractor‘s proposal for frost protection shall not relieve the Contractor of the responsibility for the quality and strength of the RCC placed during cold weather. Any RCC that freezes shall be removed and replaced at the Contractors expense. During periods of hot weather or windy conditions,

special precautions shall be taken to minimize moisture loss due to evaporation. Precautions may include cooling of aggregate stockpiles by the use of a water spray, protective covers on dump trucks, temporary windbreaks to reduce wind velocity, cooling of concrete mix water, decreasing the allowable time between mixing and final compaction and keeping the surface of the newly placed RCC pavement damp with a light spray during compaction and finishing operations. Don't place RCC when rain is imminent. If rain occurs during placement of RCC cease all operations if it is raining hard enough to be detrimental to the finished product. Placement may continue during light rain or mists provided the surface of the RCC pavement is not washed-out or damaged due to tracking or pickup by dump trucks or rollers. Dump truck covers must be used during these periods. The Town will be the sole judge as to when placement must be stopped due to rain.

1.08 Joints

A. Fresh Vertical Joint

1. A vertical joint shall be considered a fresh joint when an adjacent RCC lane is placed within 90 minutes of placing the previous lane. The contractor shall ensure that the contact face is moist and not segregated. Before rolling, the vertical joint surface should be hand-finished as necessary immediately behind the paver to produce a tight surface. When placing RCC with a fresh longitudinal joint, leave the outer 12 to 18 inches of the paving lane uncompacted during the initial rolling operation. The uncompacted edge is then used to set the height of the paver screed for paving the adjacent lane. After the adjacent lane is placed, the joint is compacted by centering the roller drum over the joint and compacting adjacent lane edges simultaneously. Roll extra passes as necessary to achieve the required density and smoothness in the joint area.

B. Cold Vertical Joint

1. A cold vertical joint is made when either side of the joint is not compacted within 90 minutes of plant mixing. Saw cut the edge of previous lane back to sound RCC (minimum 6") to form a vertical face prior to placing the next pass. Trimming by grader blade is permitted, if done prior to the end of the workday. Prior to placing fresh RCC mixture against a compacted cold vertical joint, the joint shall be thoroughly cleaned of any loose or foreign material. The vertical joint face shall be wetted and in a moist condition immediately prior to placement of the adjacent lane.

C. Fresh Horizontal Joint

1. For multiple-lift applications, a horizontal joint is considered a fresh joint when a subsequent RCC lift is placed within sixty (60) minutes of placing the previous lift. The surface of the lower lift shall be kept clean and continually moistened prior to placement of the subsequent lift.

D. Cold Horizontal Joint

1. For multiple-lift applications, a horizontal joint is considered a cold joint when the placing of the subsequent RCC lift is delayed by more than sixty (60) minutes of placing the previous lift. The surface of the first lift shall be scarified at least one-half (1/2) inch deep to yield a rough surface, prior to placement to the second lift. Immediately prior to placing the second lift of RCC, a cement/sand slurry or grout shall be applied to the scarified contact surface of the first lift. The contractor shall delay placing the second lift of RCC until the first lift attains design tensile strength as specified in Article 1.05 of this specification.

E. Contraction Joints

1. Transverse and Longitudinal contraction joints shall be made as soon as possible after placement of RCC without damaging the pavement, as approved by the Town, except that transverse joints shall be spaced at a maximum of 30 foot intervals, or at intervals directed by the Town. All pavements shall have at least one center longitudinal contraction joint.

1.09 Quality Control and Assurance

A. General

1. The contractor shall maintain equipment and qualified personnel required to determine the magnitude of the various properties of RCC governed by the specifications. These properties shall be maintained within the limits of this specification. The contractor shall notify the Town a minimum of 24 hours (not including holidays and weekends) prior to start of RCC paving. Testing at the plant and the paving site is the responsibility of the Contractor or Developer and shall be performed by a private Independent Testing Laboratory. The Contractor and Supplier shall provide safe and convenient access, acceptable to the Town, for the inspection and sampling of the RCC and constituent materials, at both the production plant and the paving site and shall cooperate in the inspection and sampling process at all times.

B. Test Strip

1. The contractor shall construct a test section for every project of a thickness equal to the plan thickness and planned construction width with at least 100 tons of RCC. The same equipment proposed for use on the project shall be used for the test strip. The test strip will be used to resolve anticipated problems with equipment, mix behavior, compaction and/or strength characteristics. The test strip shall be constructed at a location chosen by the contractor at least 45 days prior to the start of paving operations. The Contractor must also demonstrate the ability to achieve a smooth, hard, uniform surface free of excessive tears, ridges, spalls and loose material. Also, achieve 85% of the maximum wet density in accordance with ASTM D 1557, directly out of the paver and 98% of the maximum wet density after final rolling. During construction of the test section, the Contractor shall

establish an optimum rolling pattern and procedure for obtaining a density of not less than 98% of the maximum wet density. After completion of the test strip, cores will be extracted to verify mix compliance. This will be performed by the Independent Testing Laboratory at the expense of the Contractor. During the trial placement, the Independent Testing Personnel shall calibrate their nuclear density gauges in accordance with ASTM C 1040, with a sample of the test section mix. Moisture readings of the gauge shall be calibrated using oven dry samples of the plant-mixed RCC. The contractor shall not commence placement of RCC until all testing has been completed and the Town has verified the results are acceptable.

C. Pre-placement

1. The Independent Testing Laboratory will develop a moisture/density relationship of the actual job materials in accordance with ASTM D 1557. Optimum moisture content and maximum wet densities shall be established and copies of the moisture-density curves shall be provided to the Town prior to any RCC placement.

D. During Placement

1. The Contractor shall ensure quality control at the plant, by controlling materials, obtaining test samples and ensuring segregation is not occurring while loading haul trucks. The Contractor, in cooperation with the Independent Testing Laboratory, shall ensure that compaction and grade specifications are met and time limits are adhered to. The finished surface of the RCC pavement, when tested with a 10 foot straight edge or crown surface template, shall not vary from the straight edge or template by more than 3/8 inch at any one point. When the surface smoothness is outside the specified surface tolerance the Contractor shall grind the surface to within the tolerance by use of self-propelled diamond grinders. Milling of the final surface is not acceptable, unless it is for the removal of the pavement.

E. Field Density

1. The Independent Testing Personnel, at the Contractor's expense, shall perform density testing of the RCC in accordance with ASTM C 1040, direct transmission mode, directly behind the paver. Only wet density shall be used for evaluation. At least five (5) tests shall be performed at the back of the paver and after final compaction for each 250 cubic yards placed. The required density out of the back of the paver and after final rolling shall be as specified in Article 1.07 of this specification. The Contractor shall be responsible for verifying required densities are achieved by the paver and after final rolling. If density test results do not meet the requirements of Article 1.07, the Contractor shall determine the source of the problem and take immediate steps to correct the problem. If the problem cannot be resolved to the satisfaction of the Town, placement shall be suspended. Any RCC placed while attempting to correct the problem, and the areas determine to have deficiencies are subject to removal and replacement, per Article 1.10.

F. After Placement

1. The Independent Testing Consultant, at the Contractor's expense, shall core at least nine (9) cylindrical specimens from each Pavement Area. Pavement Area is defined as four thousand (4,000) square yards or each day's placement, whichever is less. Length measurements of the cores and compressive strength testing shall be in accordance with ASTM C 42. Splitting tensile testing shall be in accordance with ASTM C 496. Testing shall be conducted as follows: Compressive Strength Testing: Six (6) of the cores obtained for thickness verification will be tested for compressive strength at 28 days. Splitting Tensile Strength: Three (3) of the cores obtained for thickness verification will be tested for splitting tensile strength at seven (7) days. All cores tested shall meet the requirements of Articles 1.05 and 1.10.

1.10 Pavement Thickness and Strength

A. The contractor shall construct the RCC pavement within 0.2 inches of the specified plan thickness, as determined by measurement of cores cut as specified in Article 1.09 of these specifications. If any core shows a deficiency in thickness of more than ½ inch from the specified plan thickness, take additional cores to determine the limits of the deficiency. Follow the procedures below:

1. At the Contractor's expense, take a core five (5) feet longitudinally on both sides of the deficient core. If both the cores are less than ½ inch deficient in thickness the zone of deficiency has been determined.
2. If either or both cores taken in Item 1 above are more than ½ inch deficient in thickness, cut a core 50 feet longitudinally from the deficient core(s), at the Contractor's expense. If the 50 foot core(s) is more than ½ inch deficient, cut additional cores at 100 foot longitudinal intervals until a core less than ½ inch deficient is obtained; until the pavement ends; or until overlapping an adjacent pavement area's core in the same lane, all at the Contractor's expense.
3. If a pavement area has cores more than ½ inch deficient in thickness and the pavement area's constructed width is greater than 12 feet, obtain cores transverse to the location of the more than ½ inch deficient cores. Obtain transverse cores at a location half the distance from the deficient core to the furthest edge of pavement. Obtain a transverse core for each core more than ½ inch deficient, at the Contractor's expense.
4. The Town will use the cores that measure less than ½ inch deficient in thickness to define the limits of the deficiency. If any core shows a deficiency in thickness of more than 1 inch or compressive strength less than 85% of the compressive strength mix design cited above, determine the extent limits of deficiency by following steps 1 through 4 above, at the Contractor's expense. Remove and replace those areas greater than 1 inch deficient in thickness and/or less than 85% of the mix design compressive strength. The Town will calculate average thickness and compressive strength of concrete pavement placed as follows:
   a. When zones of deficient thickness greater than ½ inch to 1 inch are allowed to remain in place, the Engineer will calculate two average

thicknesses. A Project Average Thickness (PAT) including all cores not more than ½ inch deficient. Cores that exceed the specified thickness by more than ½ inch will be considered as the specified thickness plus ½ inch when calculating the PAT. A second Deficient Zone Average (DZA) will include all cores with thickness deficiency greater than ½ inch to 1 inch. The pavement represented by each of the two averages, PAT or DZA, will be calculated.

b. Determine and apply deductions for thickness deficiency to each separately placed width of pavement.
c. For any pavement areas removed and replaced, re-core those areas replaced following this section of the specifications. Include those core values into the calculations for average pavement thickness and strength.
d. Calculate the compressive strength deficiency area by following the steps cited above for thickness items but substituting “the 0.5 inch thickness deficiency with 90% compressive strength” and the “1.0 inch thickness deficiency” with “less than 85% compressive strength.”

1.11 Remedial Actions

A. Correct deficiencies while RCC is still plastic; otherwise do repairs after seven (7) days. After seven (7) days, the RCC shall be removed by saw cutting full depth before removal. Replace the RCC utilizing a Cast-in-Place concrete meeting the requirements of INDOT specification section 702;

B. Class C Concrete as directed by the Town. The new concrete shall be doweled into the existing RCC utilizing epoxy coated reinforcing bars according to INDOT standards and specifications. Any RCC pavement found to be of unacceptable thickness, or deficient in any testing done in accordance with this specification, shall be subject to removal and replacement by the contractor, at no cost to the Town, including removal and replacement of any intermediate and surface asphalt courses. Grind off high surface variations to a finish acceptable to the Engineer. Filling of low areas with fresh RCC is not permitted. If asphalt surfacing is specified, low areas accepted by the Engineer shall be made up with additional surfacing material without extra payment. All repairs are subject to the Engineers approval.

1.12 Opening to Traffic

A. The Contractor shall protect the RCC from vehicular traffic during the curing period. The RCC pavement may be opened to traffic or asphalt surfaced as specified on the plans a minimum of seven (7) days after placement or once the strength requirements of section Article 1.05 of this specification have been met. The Contractor shall maintain the RCC pavement in good condition until all work is completed and accepted. Such maintenance shall be performed by the Contractor at his own expense.

1.13 Warranty

A. Roller Compacted Concrete is an alternate construction method only allowed by written permission from the Town of Brownsburg. As an alternate method of

construction, the Developer/Contractor shall comply with the Warranty requirements as stated herein or as required by the current Town of Brownsburg Subdivision Control Ordinance, whichever is stricter. Pavement constructed according to this specification shall be guaranteed by the Developer/Contractor for a period not less than five (5) years from date of acceptance of the street by the Town. The contractor shall provide a warranty bond in the amount agreed to that represents the cost to install the entire pavement section, including any surface materials installed on top of the RCC.

PART 2 - PRODUCTS

Not Used.

PART 3 - EXECUTION

Not Used.

PART 4 - FIGURES

Not Used.

END OF SECTION 03500

SECTION 03501 – FULL DEPTH RECYCLING (FDR)

PART 1 - GENERAL

1.01 Summary

A. Full Depth Recycling (FDR) shall be performed where shown on the plans and shall provide the line and grade as shown. This work consists of pulverizing and stabilizing existing pavement and underlying material to construct a reclaimed base course, RBC, to the required stiffness in accordance with the requirements listed herein.

B. If used, Fly ash, class F shall only be used in combination with lime or Portland Cement, Type I.

C. If used, asphalt emulsions are also subject to the following requirements.

Property	**Minimum**	**Maximum**	**Test Method**
Viscosity, Saybolt Furol @ 25° C	20	300	AASHTO T 59
Sieve Test, %		0.1	AASHTO T 59
Tests on Residue by Distillation Test[1]			
Residue % by Distillation	60.0		AASHTO T 59
Oil Distillation by Volume of Emulsion, %		5	AASHTO T 59
Penetration, 25°C, 100g, 5 sec.[2]	100	300	AASHTO T 49

[1]Modified AASHTO T 59 procedure-distillation temperature of 177°C with a 20 minute hold. The ASTM D244 vacuum distillation procedure may be substituted once the maximum oil distillate is satisfied.
[2]Emulsion Residue for the Emulsion used in the design process should be reported as part of the design and QC samples from the job should be plus or minus 25% of the reported value.

D. After the pulverization operation is complete, the RBC shall meet the following gradation requirements, exclusive of existing oversized base material:

SIEVE SIZE	**% PASSING**
2”	100*
1.5”	90-100*

E. Mix designs may utilize foamed asphalt PG binder, asphalt emulsions, Portland Cement, or Portland Cement slurry. The foamed asphalt and asphalt emulsion mix designs may also utilize Portland Cement, fly ash, lime, and coarse aggregate to achieve the required performance properties. Portland Cement and Portland Cement slurry mix designs may also use fly ash and coarse aggregate to achieve the required performance properties.

F. If a mix design is provided, it is for information only. The Contractor is required to meet the performance specification regardless of mix design approval. Contractor shall provide a mix design for approval at least seven (7) days prior to beginning the pavement reclaiming operation. The mix design and all associated testing shall be performed by an independent geotechnical consultant and laboratory AT THE Contractor's expense. The Contractor is responsible for obtaining all samples required to develop the new mix design.

G. The mix design shall be based on samples of the existing pavement and underlying material taken to the required depth at the project site. Samples shall be taken at a minimum frequency of one per 7,000 SYS of RBC. The Contractor is responsible to determine locations and number of additional samples necessary to obtain comprehensive information necessary for development of the mix design(s). All pavement damaged by the sampling operation shall be temporarily repaired with cold patch asphalt, concrete or similar material.

H. At a minimum, the following tests shall be performed on the samples:

1. Sieve analysis in accordance with AASHTO T 88.
2. Optimum moisture and maximum dry density in accordance with AASHTO T 99.
3. Shear Strength in accordance with AASHTO 236

I. The mix design(s) shall be submitted a minimum of 7 calendar days prior to beginning the pulverizing operation. The mix design shall include all test results performed in conjunction with the development of each mix design.

1.02 Performance Requirements

A. The minimum structural number required for this project is 4.00, with a minimum shear strength of 300 psi. The wedge and level course (if specified) shall not be included in the determination of the structural number or shear strength testing. The 1.5 inch asphalt wearing course shall be included in determination of the structural number attainment, but will be excluded from the shear strength testing.

1.03 General Requirements

A. The Contractor shall provide all necessary labor, equipment, materials, QC testing and reporting, and incidentals required to pulverize the existing pavement and base and construct the RBC.

B. Unless approved otherwise by the Engineer in writing, the existing pavement shall be pulverized and stabilized in separate operations. After completion of the initial pulverization, the material shall be graded and compacted to the profile and cross section shown on the plans.

C. After completion of the stabilization operation, the RBC will be allowed to cure. The contractor shall provide adequate traffic control measures to protect the RBC from traffic. After five (5) days of curing, core samples shall be taken and tested

to determine minimum RBC strength requirements are satisfied. After seven (7) days of curing, the RBC shall be proof-rolled in accordance with INDOT specification section 203.26. RBC areas that fail the proof-roll shall be repaired. Plans to repair the failed area(s) shall be submitted to the engineer at least three (3) days in advance of the planned operation. Failed areas shall be removed and replaced with INDOT class C concrete in accordance with INDOT specification section 702 using Class AP coarse aggregate. Larger areas may be Full Depth Recycled, if allowed by the Engineer. Any failed areas re-treated by Full Depth Recycling shall be protected and allowed to cure five (5) days, core samples shall be taken and tested to determine minimum RBC strength requirements are satisfied. After seven (7) days of curing, the RBC shall be proof-rolled in accordance with INDOT specification section 203.26. RBC areas that fail the proof-roll shall be removed and replaced with INDOT class C concrete in accordance with INDOT specification section 702 using Class AP coarse aggregate.

1.04 Curing

A. The RBC shall be allowed to cure for 5 calendar days. During the curing period, local traffic shall be maintained to provide access to residences and businesses. If raveling or other distresses become evident in the RBC, a Seal Coat, Type 1 in accordance with INDOT specification section 404 shall be placed to protect the RBC throughout the remainder of the curing period. The seal coat shall be compatible with the chemical additives in the RBC.

1.05 Weather Restrictions

A. Stabilization of the RBC shall not be performed if any of the following apply unless approved by the Engineer:

1. It is before April 15 or after October 15 of any calendar year.
2. The air temperature is 50°F or less.
3. The forecast from the nearest National Weather Service office predicts a low temperature of 32° F or below within 24 hours.
4. Water is standing on the surface of the pulverized material.

1.06 Method of Measurement

A. Full depth asphalt reclamation will be measured by the square yard complete in place.

B. All costs associated with the pulverization of existing asphalt pavement and underlying material, asphalt or chemical stabilization, compaction, and curing of the RBC shall be included in the cost of the full depth reclamation (FDR) item.

C. The costs associated with the performance of the mix design as well as quality control testing and reporting shall also be included in the cost of the full depth reclamation (FDR) item.

PART 2 - PRODUCTS

Not Used.

PART 3 - EXECUTION

Not Used.

PART 4 - FIGURES

Not Used.

END OF SECTION 03501

SECTION 03502 – PERVIOUS CONCRETE

PART 1 - GENERAL

1.01 Mix Design and Materials

A. Pervious concrete shall use the same materials as conventional concrete, with the exceptions that the fine aggregate shall be eliminated entirely, and the size distribution (grading) of the coarse aggregate shall be kept narrow, allowing for relatively little particle packing.

B. Table 3 provides sample ranges of materials proportions in pervious concrete for illustration purposes only, is not to be considered a job mix formula, and is not guaranteed to be accepted by the Town of Brownsburg. ACI 211.3 provides a procedure for producing pervious concrete mixture proportions.

1.02 Cementitious materials

A. Portland cements (ASTM C 150, C 1157) and blended cements (ASTM C 595, C 1157) may be used in pervious concrete. In addition, supplementary cementitious materials (SCMs) such as fly ash, pozzolans (ASTM C 618), and ground-granulated blast furnace slag (ASTM C 989) may be used. Silica fume, fly ash, and blast furnace slag, in proper amounts, all increase durability by decreasing permeability and cracking. Silica fume may replace cement in approximate quantities of 5-12%; Fly ash may be used to replace 5-65% of the Portland cement; and Blast furnace slag may replace 20-70% of the cement in the mix, as determined by mix design and performance testing.

1.03 Aggregate

A. Pervious concrete is made with a narrow aggregate gradation, but different surface textures can be obtained through the use of different maximum sizes. The maximum size aggregate to be used on Town of Brownsburg projects will be 3/8 IN.

B. Fine aggregate content is eliminated in Town of Brownsburg pervious concrete, and coarse aggregate is kept to a narrow gradation. Commonly-used gradations of coarse aggregate include ASTM C 33 No. 8 (⅜ in. to No. 16), and No. 89 (⅜ in. to No. 50) sieves, No. 8, and No. 89. ASTM D 448 also may be used for defining grading. A narrow grading is the important characteristic. Larger aggregates provide a rougher surface. Generally, A/C ratios are in the range of 4.0 to 4.5 by mass. These A/C ratios lead to aggregate contents of between about 2200 lb/yd^3 and 3000 lb/yd^3. Higher A/C ratios have been used in laboratory studies, but significant reductions in strength result.

C. Only angular aggregate (crushed stone) may be used to produce Town of Brownsburg pervious concrete. Aggregate for pavements should conform to ASTM D 448, while ASTM C 33 covers aggregates for use in general concrete construction. As in conventional concrete, pervious concrete requires aggregates to be close to a saturated, surface-dry condition, or close monitoring of the

moisture condition of aggregates should allow for accounting for the free moisture on aggregates. It should be noted that control of water is important in pervious concrete mixtures. Water absorbed from the mixture by aggregates that are too dry can lead to dry mixtures that do not place or compact well. However, extra water in aggregates contributes to the mixing water and increases the water-to-cement ratio of the concrete.

1.04 Water-to-cement ratios

A. Water-to-cement ratios between 0.27 and 0.30 are used routinely with proper inclusion of chemical admixtures. Water content should be tightly controlled. The correct water content has been described as giving the mixture a sheen, without flowing off of the aggregate. A handful of pervious concrete formed into a ball will not crumble or lose its void structure as the paste flows into the spaces between the aggregates.

1.05 Admixtures

A. Chemical admixtures are used in pervious concrete to obtain special properties, as in conventional concrete. Because of the rapid setting time associated with pervious concrete, retarders or hydration-stabilizing admixtures are commonly used. Use of chemical admixtures should closely follow manufacturer's recommendations. Air-entraining admixtures shall be used to reduce freeze-thaw damage in pervious concrete. ASTM C 494 governs chemical admixtures, and ASTM C 260 governs air-entraining admixtures. Proprietary admixture products that facilitate placement and protection of pervious pavements are also used.

Table 3. Typical* Ranges of Materials Proportions in Pervious Concrete**

	Proportions, lb/yd³
Cementitious materials	450 to 700
Aggregate	2000 to 2500
Water: cement ratio*** (by mass)	0.27 to 0.34
Aggregate: cement ratio*** (by mass)	4 to 4.5:1
Fine: coarse aggregate ratio**** (by mass)	0 to 1:1

* These proportions are given for information only. Successful mixture design will depend on properties of the particular materials used and must be tested in trial batches to establish proper proportions and determine expected behavior. Concrete producers may have mixture proportions for pervious concrete optimized for performance with local materials. In such instances, those proportions are preferable.

** Chemical admixtures, particularly retarders and hydration stabilizers, are also used commonly, at dosages recommended by the manufacturer. Use of supplementary cementitious materials, such as fly ash and slag, is common as well.

*** Higher ratios have been used, but significant reductions in strength and durability may result.

**** Addition of fine aggregate will decrease the void content and increase strength.

1.06 Mix design

A. A concrete mix design submittal shall be in accordance with INDOTSS 501.05, and must be approved by the Town of Brownsburg. The mix design shall yield a 28-day compressive strength of 3,000 psi. The mix design shall be submitted a minimum of 7 calendar days prior to the trial batch , and shall include the following:

1. a list of all ingredients
2. the source of all materials
3. the fine to total aggregate ratio
4. the gradation of the aggregates
5. the absorption of the aggregates
6. the SSD bulk specific gravity of the aggregates
7. the specific gravity of pozzolan
8. the batch weights (mass)
9. the names of all admixtures
10. the admixture dosage rates and the manufacturer's recommended range.

B. The mix design shall be used to conduct a trial batch in accordance with INDOTSS 501.06. Upon successful testing of the trial batch, the Contractor shall submit the concrete mix design for approval a minimum of three (3) work days prior to production.

C. Production shall not commence without approval by the Town of Brownsburg.

D. The approved mix design may be changed or adjusted in accordance with the following:

1.07 Change in, or Adjustments to, Materials

A. A change in a previously approved mix design, for a given contract, to any of the following shall be submitted to the Town of Brownsburg, referencing the original mix design.

1. cement source or type
2. pozzolan source or type
3. coarse aggregate source or type
4. admixture type.

B. A new trial batch shall be conducted in accordance with INDOTSS 501.06, or verification of the new mix design may be made during the 1st day of production by tests conducted by an independent testing firm hired by the Contractor. Acceptance test results may be used for the Engineer's verification tests.

PART 2 - PRODUCTS

Not Used.

PART 3 - EXECUTION

3.01 Placement

A. The pervious concrete shall not be placed on frozen ground. pervious concrete shall be *protected from freezing for 72 hours.* pervious concrete *shall not be placed* into or through standing water.

B. The pervious concrete shall be placed uniformly to the required line and grade. The pervious concrete shall not be subjected to load nor disturbed by construction activities until a minimum of fourteen (14) days after placement or until a test core or cylinder yields a compressive strength of 2,500 psi or greater.

PART 4 - FIGURES

Not Used.

END OF SECTION 03502

SECTION 04950 – PRESERVATIVE SEAL

PART 1 - GENERAL

1.01 Summary

A. Scope: This work shall consist of furnishing all labor, material, and equipment necessary to perform all operations for the application of a penetrating asphalt preservative seal to asphaltic concrete surface courses. The approved product shall be applied by spray equipment capable of coating the asphalt surface with a complete, uniform coating, at the prescribed rate per square yard. All work shall be in accordance with the specifications, the applicable drawings, and subject to the terms and conditions of this contract.

1.02 Material Specifications

A. The asphalt preservative seal material shall be an emulsion composed of a petroleum resin oil base uniformly emulsified with water. Each contractor must submit a certified statement from the manufacturer showing that the asphalt emulsion conforms to the required physical and chemical requirements below:

	Test Method		**Requirements**	
Tests	ASTM	AASHTO	Min.	Max.
Tests on Emulsion:				
Viscosity @ 25°C, SFS	D-244	T-59	15	40
Residue, % W[1]	D-244(Mod.)	T-59(Mod)	60	65
Miscibility Test[2]	D-244(Mod.)	T-59(Mod)	No Coagulation	
Sieve Test, %W[3]	D-244(Mod.)	T-59(Mod)	-	0.1
Particle Charge Test	D-244	T-59	Positive	
Percent Light Transmittance[4]	GB	GB	-	30
Tests on Residue from Distillation:				
Flash Point, COC, °C	D-92	T-48	196	-
Viscosity @ 60°C, cSt	D-445	-	100	200
Asphaltenes, %w	D-2006-70	-	-	1.00
Maltene Dist. Ratio $\frac{PC + A_1}{S + A_2}$[5]	D-2006-70	-	0.3	0.6
PC/S Ratio[5]	D-2006-70	-	0.5	-
Saturated Hydrocarbons,S[5]	D-2006-70	-	21	28

---

[1] ASTM D-244 Modified Evaporation Test for percent of residue is made by heating 50 gram sample to 149 C (300 F) until foaming ceases, then cool immediately and calculate results.

[2] Test procedure identical with ASTM D-244-60 except that .02 Normal Calcium Chloride solution shall be used in place of distilled water.

[3] Test procedure identical with ASTM D-244 except that distilled water shall be used in place of two percent sodium oleate solution.

[4] Test procedure is attached.

[5] Chemical composition by ASTM Method D-2006-70:
PC = Polar Compounds, A_1 = First Acidaffins
A_2 = Second Acidaffins, S = Saturated Hydrocarbons

1.03 Material Performance

A. The preservative seal material shall have a record of at least five years satisfactory service as a penetrating asphalt regenerating agent and in-depth sealer. Satisfactory service shall be based on the capability of the material to decrease the viscosity and increase the penetration value of the asphalt binder.

B. Testing shall be performed on extracted asphalt cement from a pavement to a depth of three eighths inch (3/8"). The tests shall confirm that the viscosity was reduced by a minimum of 45 percent and the penetration value increased by a minimum of 25 percent. The product shall provide a seal to the intrusion of air and water.

C. The Contractor must submit the manufacturer's certification that the material proposed for use is in compliance with the specification requirements, and previous use documentation and test data conclusively demonstrating that the product has been used successfully for a period of five years by government agencies such as Cities, Counties, etc; and that the product has been proven to perform, as heretofore required, through field testing as to the required change the in asphalt binder viscosity and penetration number. Testing data shall be submitted indicating such product performance on a sufficient number of projects, each being tested for a minimum period of three years to insure reasonable longevity of the treatment, as well as product consistency.

1.04 Applicator Experience

A. The penetrating asphalt preservative seal shall be applied by an experienced applicator of such material. The Contractor shall have a minimum of three (3) years experience in applying the product proposed for use. He must submit a list of five projects on that which he applied said product. He shall indicate the project dates, number of square yards treated in each and the name and phone number of the government official in charge of each project.

B. A project superintendent knowledgeable and experienced in application of the penetrating asphalt preservative seal must be in control of each day's work. The Contractor shall submit a written experience outline of the project superintendent.

1.05 Product Standards and Alternates

A. The product "Reclamite"®, as manufactured by Tricor Refining, LLC is the standard for these specifications. Contractors may offer an ALTERNATE for the Standard specified, provided the Contractor adheres to the following and submits a request for approval, which shall include:

1. Product name and manufacturer.
2. Furnish complete specifications and descriptive literature for the alternate as well as a one-gallon sample of the material proposed for use. Such descriptive and detailed information shall be complete and at least equal in detail to the Town's requirements for the standard item for which the alternate is offered.
3. Submit a current Material Safety Data Sheet for the alternate materials. The Town will give the alternate consideration. The Contractor may furnish only those

alternate items included in his proposal and approved by the Town prior to award of a contract.

1.06 Application Temperature/Weather Limitations

A. The temperature of the penetrating asphalt preservative seal, at the time of application shall be as recommended by the manufacturer. The penetrating asphalt preservative seal shall be applied only when the existing surface to be treated is thoroughly dry and when it is not threatening to rain. The penetrating asphalt preservative seal shall not be applied when the ambient temperature is below 40° F.

1.07 Handling of Product

A. Contents in tank cars or storage tanks shall be circulated at least forty-five minutes before withdrawing any material for application. When loading the distributor, the product concentrate shall be loaded first and then the required amount of water shall be added. The water shall be added into the distributor with enough force to cause agitation and thorough mixing of the two materials. To prevent foaming, the discharge end of the water hose or pipe shall be kept below the surface of the material in the distributor that shall be used as a spreader. The distributor truck will be cleaned of all of its asphalt materials, and washed out to the extent that no discoloration of the emulsion may be perceptible. Cleanliness of the spreading equipment shall be subject to the approval and satisfaction of the Town. Maintain a material safety data sheet (MSDS) for the product(s) on-site at all times.

1.08 Resident Notification

A. The contractor shall distribute by hand, a typed notice to all residences and businesses on the street to be treated. The notice will be delivered no more than 24 hours prior to the treatment of the road. The notice will have a local phone number that residents may call to ask questions. The notice shall be of the door hanger type that secures to the door handle of each dwelling. Unsecured notices will not be allowed. The contractor shall also place the notice on the windshield of any parked cars on the street. Hand distribution of this notice will be considered incidental to the contract.

1.09 Application Equipment

A. The distributor for spreading the penetrating asphalt preservative seal shall be self-propelled, and shall have pneumatic tires. The distributor shall be designed and equipped to distribute the product uniformly on variable widths of surface at readily determined and controlled rates from 0.05 to 0.5 gallons per square yard of surface, and with an allowable variation from any specified rate not to exceed 5 percent of the specified rate.

B. Distributor equipment shall include full circulation spray bars, pump tachometer, volume measuring device and a hand hose attachment suitable for application of the emulsion manually to cover areas inaccessible to the distributor. The distributor shall be equipped to circulate and agitate the emulsion within the tank.

C. A check of distributor equipment as well as application rate accuracy and uniformity of distribution shall be made when directed by the Town.

D. The truck used for sanding shall be equipped with a spreader that allows the sand to be uniformly distributed onto the pavement. The spreader shall be able to apply 1/2 pound to 3 pounds of sand per square yard in a single pass. The spreader shall be adjustable so as not to broadcast sand onto driveways or treelawns.

E. The sand to be used shall be free flowing, without any leaves, dirt, stones, etc. Any wet sand shall be rejected.

F. Any equipment that is not maintained in full working order, or is proven inadequate to obtain the results prescribed, shall be repaired or replaced at the direction of the Town.

1.10 Application of Penetrating Asphalt Preservative Seal

A. Storm inlets shall be protected from overspray and sand application by means acceptable to the Town of Brownsburg. Protection shall be removed within 24 hours after sand is removed. The penetrating asphalt preservative seal shall be applied by a distributor truck at the temperature recommended by the manufacturer and at the pressure required for the proper distribution. The emulsion shall be so applied that uniform distribution is obtained at all points of the areas to be treated. Areas inadvertently missed shall receive additional treatment as may be required by hand sprayer application.

B. Application of product shall be on one-half width of the pavement at a time. When the second half of the surface is treated, the distributor nozzle nearest the center of the road shall overlap the previous application by at least one-half the width of the nozzle spray. In any event the centerline construction joint of the pavement shall be treated in both application passes of the distributor truck.

C. Before spreading, the product shall be blended with water as specified by the manufacturer. The combined mixture of product and water shall be spread at the rate of 0.05 to 0.10 gallons per square yard, or as approved by the Town following field testing.

D. Where more than one application is to be made, succeeding applications shall be made as soon as penetration of the preceding application has been completed and the Town grants approval for additional applications.

E. Grades or super elevations of surfaces that may cause excessive runoff, in the opinion of the Town, shall have the required amounts applied in two or more applications as directed.

F. After the street has been treated, the area within one foot of the curb line on both sides of the road shall receive an additional treatment of the penetrating asphalt preservative seal emulsion. Said treatment shall be uniformly applied by a method acceptable to the Town.

G. After the penetrating asphalt preservative seal emulsion has penetrated, a coating of dry sand shall be applied to the surface in sufficient amount to protect the traveling public as required by the Town.

H. The Contractor shall furnish a quality inspection report showing the source, manufacturer, and the date shipped, for each load of product. When directed by the Town, the Contractor shall take representative samples of material for testing.

1.11 Street Sweeping

A. The Contractor shall be responsible for sweeping and cleaning of the streets prior to, and after treatment.

B. Prior to treatment, the street will be cleaned of all standing water, dirt, leaves, foreign materials, etc. This work shall be accomplished by hand brooming, power blowing and/or other approved methods. If in the opinion of the Town the hand cleaning is not sufficient, then a self-propelled street sweeper shall be used.

C. All sand used during the treatment must be removed no later than 48 hours after treatment of the street. This shall be accomplished by a combination of hand and mechanical sweeping. All turnouts, cul-de-sacs, etc. must be cleaned of any material to the satisfaction of the Town.

D. If, after sand is swept and in the opinion of the Town the penetrating asphalt preservative seal residue presents a hazardous condition on the roadway, the contractor must apply additional sand and sweep same no later than 24 hours following reapplication. No additional compensation will be allowed for reapplication and removal of sand.

1.12 Traffic Control

A. The Contractor shall schedule his operations and carry out the work in a manner to cause the least disturbance and/or interference with the normal flow of traffic over the areas to be treated. Treated portions of the pavement surfaces shall be kept closed and free from traffic until penetration, in the opinion of the Town, has become complete and the area is suitable for traffic.

B. When, in the opinion of the Town, traffic must be maintained at all times on a particular street, then the Contractor shall apply product to one lane at a time. Traffic shall be maintained in the untreated lane until the traffic may be switched to the completed lane.

C. The Contractor shall be responsible for all traffic control and signing required to permit safe travel. The contractor shall notify the Town, police and fire departments as to the streets that are to be treated each day.

D. If, in the opinion of the Town, proper signing is not being used, the Contractor shall stop all operations until safe signing and barricading is achieved.

1.13 Acceptance

A. The contractor shall be responsible for conducting “End Result” testing, through coring or other approved means to determine compliance with these specifications.

1. The product used shall increase the penetration of the asphalt in the top ¼ IN. by 30% within 60 days of application. Asphalt cement content shall be measured using AASHTO T-308-05.
2. The product used shall reduce the viscosity of the asphalt binder by a minimum of 20%for pavement that is less than two (2) years old and by a minimum of 40% for pavement that is greater than or equal to two (2) years old. The viscosity shall be measured by ASTM 3381.
3. The skid resistance of the pavement after application shall allow an automobile to safely traverse a 90 degree turn at 15 mph without becoming unstable, and shall not show more than a 25% loss in measured friction resistance values at a period 12 hours after application of the material.

B. Should the required increase in penetration value not be achieved, additional applications of the product shall be made at application rates not to exceed 50 percent of the initial application rate. Retreatment and retesting shall be at the expense of the Contractor. The Town of Brownsburg shall hold the Contractor’s performance bond in full force and effect until final test data indicates the work was completed in accordance with this specification.

PART 2 - PRODUCTS

Not Used.

PART 3 - EXECUTION

Not Used.

PART 4 - FIGURES

Not Used.

END OF SECTION 04950

SECTION 13550 - EMERGENCY PREEMPTION (GPS)

PART 1 - GENERAL

1.01 Summary

A. Section Includes: Furnishing, installing and maintaining all permanent emergency preemption equipment as shown in the GTT Opticom specifications and ordered by the Town to be used during new signal installation.

1.02 Warranty

A. The manufacturer of the required priority control system will warrant that, provided the priority control system has been properly installed, operated and maintained, component parts of a matched component system that prove to be defective in workmanship and/or material during the first five (5) years from the date of shipment from the manufacturer will be covered in a documented system-protection plan. Additionally the manufacturer must provide an added five-year maintenance plan for repair or replacement for a total of ten (10) years of product coverage.

B. The protection plan will warrant that component parts of a matched component system that are not subject to coverage limitations and prove to be defective in workmanship and/or material during the first five (5) years from the date of shipment from manufacturer will be repaired at no charge, and that extended coverage will be available for an additional five (5) years.

C. In total, the warranty/maintenance coverage must assure that system components will be available to allow system operation during the ten (10) year warranty/maintenance coverage.

D. Submit a copy of the manufacturer's written warranty outlining the conditions stated above. Coverage and coverage limitations are to be administered as detailed in the manufacturer’s Warranty/Maintenance document.

PART 2 - PRODUCTS

2.01 Products

A. Vehicle Equipment

1. The multimode vehicle unit shall include a data-encoded emitter that will generate the infrared signal, which serves as the trigger to the rest of the infrared priority control system. The infrared signal generated by the data encoded emitter will be a series of infrared pulses from an array of infrared LEDs with integral power supply. The flash signal will consist of a fixed frequency base signal and a coded overlay signal that can be used to transmit information.

2. The multimode vehicle unit shall also contain Radio/GPS Antenna with factory terminated SMA connectors to be connected to the GPS system's vehicle radio/GPS module. This antenna will include one element for receiving the GPS signal and one element for transmitting and receiving the radio signal.
3. The data-encoded LED emitter will be powered by the DC voltage supplied from the battery of the vehicle, 10 to 32 volts DC. The unit will be equipped with a weatherproof in-line fuse holder and a weatherproof quick-disconnect plug.
4. The unit, including all electronics and mounting hardware, will be miniaturized to a size no greater than 5.9 inches (15 cm) wide by 3.8 inches (9.7 cm) high by 5.0 inches (12.8 cm) deep to accommodate standalone installation.
5. The data-encoded emitter will be supplied complete with a 25 foot (7.6 m) installation cable.
6. The radio/GPS antenna cables will consist of a pair of 25 foot (7.6m) coax cables with factory terminated SMA connectors. One of these connectors will have a pin and the other will have a socket.
7. The flash sequence generated by the data-encoded emitter will carry three types of information:
   a. The first type will be one of three distinctly different base frequencies of either approximately 10Hz for a Low priority emitter, or approximately 14Hz for a High priority emitter or approximately 12Hz for Probe frequency.
   b. The second type of information generated by the data-encoded emitter will be a Vehicle classification and identification code that is interleaved into the base frequency flashes. Setting the vehicle classification and identification code will be accomplished through emitter programming software. Each data-encoded emitter will be capable of setting 10 different classifications with 1,000 different identification numbers per class for a total of 10,000 codes per base frequency.
   c. The third type of information generated by the data-encoded emitter will be reserved for setting the intersection detection range. A specially equipped emitter control module with a range setting command switch will enable the traffic engineer to activate the range code from his/her vehicle. The system will accommodate setting a separate range from 200 feet (61 m) to 2,500 feet (762 m) with 1200 range set points, for both High and Low priority signals.
8. The emitter will include a multi-purpose communication port compliant with the SAE J1708 communication standard. This port enables unit configuration to be set into the emitter and read from the emitter. It also allows real-time communication between the vehicle and the emitter.
9. While operating, the data-encoded emitter will conduct self-diagnostics designed to monitor data transmission integrity by checking for missing pulses. Any failures of the self-diagnostic tests will be displayed by flashing of the ON/OFF switch indicator light.
10. An ON/OFF switch (available for each data-encoded emitter) will be equipped with an indicator light providing internal diagnostics to assist in troubleshooting. The indicator light will operate as follows:
    a. Steady on when the emitter is operating
    b. Flash at a 0.5 Hz rate when the emitter is intentionally disabled

c. Flash at a 2 Hz rate when the emitter is inoperative

11. The LED emitter will contain visible light LEDs which may be user configured as follows:
    a. Flash at emitter flash rate during normal operation. Flash at diagnostic rate when unit has failed or is in disable mode. The visible LEDs will flash at the same rate as the infrared LEDs during normal operation. When the emitter is in Disable Mode; the LEDs will flash once every two seconds. When the emitter has failed, the LEDs will flash two times per second.
    b. Off during normal operation, Flash at diagnostic rate when unit has failed or is in disable mode. The visible LEDs will be off during normal operation. When the emitter is in Disable Mode; the LEDs will flash once every two seconds. When the emitter has failed the LEDs will flash two times per second.
    c. Flash once per second for 10 seconds at power up. The visible LEDs will flash once per second for ten seconds after initial power up. After that, the visible LEDs will shut off.
    d. Always Off: The visible LEDs will remain off at all times.
12. The data-encoded emitter will be equipped with a disable input that, when activated, the emitter will stop flashing, thereby eliminating the possibility of inadvertent signal transmission after the priority vehicle has arrived at its destination. The disable input will be programmable to operate in either a latching or non-latching mode. Operation of the disable input will be programmable using software.
13. The data encoded infrared LED based emitters shall use infrared LEDs with an angle of half intensity of +/- 10 degrees to provide precise directionality control.
14. The data-encoded emitter will operate over a temperature range of –30° F (-34° C) to +165° F (+74° C).
15. The data-encoded emitter will operate over a relative humidity range of 5% to 95%.
16. Windows™ based software will be available at no charge for programming the emitter through its SAE J1708 compatible multi-purpose port. The communication protocol will be made available upon request for creating software to implement real-time communication.
17. The emitter will provide operating modes that allow it to be powered on with the strobe/LEDs active or inactive.
18. A GPS receiver and antenna will obtain the vehicle position, speed and heading from the GPS satellite system operated by the DoD. The time information from the GPS satellites will also be used to synchronize the frequency hopping of the 2.4 GHz radio.
19. Operating in the reserved ISM communications band, and requiring no license, a 2.4 GHz spread spectrum/frequency hopping radio will provide the communications from the vehicle to the intersection when within range of a radio/GPS equipped intersection. The radio shall have a transmit power of not more than 1 watt. The radio shall have an unobstructed range of at least 2,500 feet (762 m). The radio will meet FCC Part 15 rules. Radio link association and coordination among intersections and vehicles shall be automatic.
20. The Vehicle Control Unit will provide the interface between the vehicle and the priority control system. The vehicle control unit will also interface with the

radio/GPS module. The vehicle control unit will monitor the status of the vehicle turn signal via an interface cable that will connect between the vehicle control unit and the left and right turn signal lines in the vehicle. The vehicle control unit will also monitor the disable input line as well as the remote activation input. Power to the vehicle equipment will be provided through the vehicle control unit.

21. The Vehicle Control Unit will have dimensions of no greater than 5.5 inches (14.0cm) wide by 1.75 inches (4.4 cm) high by 5.75 inches (14.6 cm) deep.
22. The radio/GPS module will have dimensions of no greater than 4.5 inches (11.4 cm) wide by 2.75 inches (7.0 cm) high by 8.0 inches (20.3cm) long. This module may also be used in the intersection. The radio/GPS module will be housed in extruded aluminum housing.
23. The vehicle equipment will be supplied complete with a 20 foot (6.1 m) minimum installation cable as well as a 15 foot (4.5 m) minimum vehicle interface cable.
24. The vehicle will transmit the following information when within range of an equipped intersection:
    a. The priority level of the vehicle equipment. This will be either high priority or low priority. The priority level will be factory set. The High priority model will have the option to be wired to operate as low priority either permanently or temporarily.
    b. The agency ID, vehicle classification ID and vehicle ID of the vehicle. Setting these ID numbers will be accomplished through programming software. Each vehicle control unit will be capable of setting 254 different agency IDs and 15 different vehicle type classifications with 9,999 different identification numbers per class for a total of 38,096,190 codes per priority level.
    c. The location, speed and heading of the vehicle.
    d. The status of the vehicle's turn signal.
    e. The radio channel as assigned by the intersection and the serial number of the vehicle control unit.
25. The vehicle control unit includes multi-purpose communication ports compliant with the RS-232 communication standard. These ports enable unit configuration to be set into the vehicle control unit and read from vehicle control unit. It also allows real-time communication between the vehicle control unit and the interface computer as well as interfacing with other devices. One of the ports may be configured to output GPS data at a user selectable baud rate in the NMEA format while the vehicle control unit is turned on. It will output the following messages (depending on the baud rate):
    a. GGA Global Positioning System Fix Data (2400 baud and higher)
    b. GSA GPS DOP and active satellites (2400 baud and higher)
    c. GSV Satellites in view (4800 baud and higher)
    d. RMC Recommended Minimum Navigation Information (1200 baud and higher)
26. The vehicle shall be capable of being wired so that the GPS data is available either while the equipment is requesting priority or when not requesting priority.
27. The vehicle control unit will be equipped with an ON/OFF switch to activate the system and request priority. The switch will be depressed to activate the

system. In addition, a remote activation line is provided to interface with other vehicle equipment. This line must have a +12 VDC applied to request priority.

28. The equipment may also be configured to be activated with the light bar/remote activation line or the ON/OFF switch rather than both.
29. The vehicle control unit will also have a series of indicator lights that will operate as follows:
    a. A power indicator as well as an indicator light in the switch will indicate that the equipment is powered on.
    b. A GPS indicator will indicate the status of GPS reception. An amber indication means that GPS has not been acquired and that the radio is not “on the air.” A green indication means that GPS has been acquired.
    c. An indicator will indicate the status of the communication between the vehicle control unit and the radio/GPS unit. An amber indication means that there is no communication and a green indication means that there is communication between the vehicle control unit and the radio/GPS unit.
    d. A disable indicator will indicate if the vehicle equipment is in a disable mode. The disable indicator and the indicator in the power switch will flash green at a rate of 2 Hz. When in Probe mode the indicator shall be illuminated solid amber.
    e. The indicators shall be capable of being programmed to provide feedback for the following:
        1) Phase selector has received preemption request.
        2) Another vehicle approaching the intersection has received the preemption request.
        3) Phase selector has received preemption request and another equipped vehicle is approaching the intersection from another direction.
30. The vehicle control unit will be equipped with a disable input that, when activated, will cause the radio to transmit that the vehicle is in disable mode, thereby eliminating the possibility of the priority request continuing after the priority vehicle has arrived at its destination. The disable input will be programmable to operate in either a latching or non-latching mode. The disable input will be programmed so that the input may be activated by applying ground or by applying +12 VDC. Operation of the disable input will be programmable using software. Additional inputs shall be included to temporarily switch the vehicle control unit to low priority and to probe mode.
31. The vehicle equipment will operate over a temperature range of –30º F (-34º C) to 165º F (+74º C).
32. The vehicle equipment will operate over a relative humidity range of 5% to 95%.
33. Windows™ based software will be available for programming the vehicle control unit through its RS-232 compatible multi-purpose port.
34. The communication protocol will be made available upon request for creating software to implement real-time communication via SAE J-1708 to other onboard devices such as Automatic Vehicle Location (AVL) equipment. This interface may be used to initiate preemption and transit signal priority requests. In addition the AVL equipment will be able to perform the following actions on the vehicle equipment:
    a. Temporarily change priority level.
    b. Change Agency, Class and Vehicle ID.

c. Activate and deactivate disable mode
d. Set turn signal status
e. Set transit route ID

35. The Vehicle unit will be able to provide the following to the AVL equipment:
    a. NMEA GPS RMC message data
    b. Door status
    c. Date and time
    d. Make and Model
    e. Discrete input status
36. The remote coding unit shall be capable of remotely programming and reading the following parameters from the data-encoded LED emitter without the use of a computer:
    a. Vehicle Class and Vehicle ID
    b. Disable operation mode
    c. Visible LED behavior
    d. The unit shall be able to reset the emitter to factory defaults.
37. The remote coding unit including all electronics shall be 6.3 inches (16 cm) long, 3.7 inches (9.4 cm) wide and 1 inch (2.5 cm) thick. The unit shall have an LCD display and a keypad.
38. The remote coding unit shall operate on four AAA batteries.

B. Multimode Phase Selector

1. The multimode phase selector recognizes inputs from both infrared and Radio/GPS activation methods at the intersection and supplies coordinated inputs to the controller.
2. The multimode phase selector is designed to be installed in the traffic controller cabinet and is intended for use directly with numerous controllers. These include California/New York Type 170 controllers with compatible software, NEMA controllers, or other controllers along with the system card rack and suitable interface equipment and controller software.
3. The multimode phase selector will be a plug-in, four channel, multiple-priority, multi-modal device intended to be installed directly into a card rack located within the controller cabinet. The multi-mode phase selector shall be capable of using existing infrared or Radio/GPS system card racks.
4. The multimode phase selector may be powered from either +24 VDC or 120 VAC.
5. The multimode phase selector shall support front-panel RS-232, USB and Ethernet interfaces to allow management by on-site interface software and central software. An RS-232 port shall be provided on the rear card edge of the unit. Additional RS-232 communication ports shall be available using the auxiliary interface panel.
6. The multimode phase selector shall include the ability to directly sense the green traffic controller signal indications through the use of dedicated sensing circuits and wires connected directly to field wire termination points in the traffic controller cabinet. This connection shall be made using the auxiliary interface panel.
7. The multimode phase selector shall have the capability of storing a minimum of 10,000 priority control calls. When the log is full, the phase selector shall drop the oldest entry to accommodate the new entry. The phase selector

shall store each call record in non-volatile memory and shall retain the record if power terminates. Each preemption record entry shall include the following points of information about the priority call:

a. Agency: Indicates the operating agency of the vehicle.
b. Classification: Indicates the class type of vehicle.
c. Identification number: Indicates the unique ID number of the vehicle.
d. Priority level: Indicates the vehicle's priority level (high, low or probe).
e. Direction: Channel A, B, C, or D; indicates the vehicle's direction of travel.
f. Call duration: Indicates the total time in seconds the priority status is active.
g. Final greens at end of call: Indicates which phases are green at the end of the call.
h. Duration of the final greens: Indicates the total time final greens were active at the end of call.
i. Time and date call started and ended: Indicates the time a priority call started and ended, provided in seconds, minutes, hours, day, month, and year.
j. Turn signal status: Indicates the status of the turn signal during the call.
k. Priority output active: Indicates if the phase selector requested priority from the controller for the call.
l. No preempt cause: Indicates the condition that prevented the call or caused the call to terminate.
m. Speed of vehicle: entry speed, exit speed, average speed through call.
n. Relative priority: relative priority of vehicle class logged at time of call.
o. Directional priority: directional priority logged at time of call.
p. Preempt output used.
q. Signal intensity: maximum and minimum infrared signal intensity during call.

8. The multimode phase selector shall support a minimum of 5000 code pairs (agency ID, vehicle ID)for each of the priority levels, high and low, providing unique vehicle identification and system security implementation at the vehicle level.
9. The multimode phase selector shall include several programmable control timers that will limit or modify the duration of a priority control condition, by channel. The control timers will be as follows:
   a. MAX CALL TIME: Sets the maximum time that a channel is allowed to be held active by a specific vehicle. It shall be settable from 60 to 65,535 seconds in one-second increments. The factory default shall be 360 seconds.
   b. OFF APPROACH CALL HOLD TIME: Sets the amount of time a call is held on a channel after the vehicle has left the approach. It shall be settable from 4 to 255 seconds in one-second increments. The factory default shall be 6 seconds.
   c. LOST SIGNAL CALL HOLD TIME: Sets the amount of time that a call is held on a channel after the intersection has lost contact with the vehicle. It shall be settable from one to 255 seconds in one-second increments. The factory default shall be six seconds.
   d. CALL DELAY TIME: Sets the amount of time a call must be recognized before the phase selector activates the corresponding output. It shall be

settable from zero to 255 seconds in one-second increments. Its factory default shall be zero seconds.

10. The multimode phase selector shall have the ability to enable or disable all calls of all priority levels. This shall be independently settable by channel.
11. A unique intersection name, which shall be broadcast, shall be settable for each multimode phase selector.
12. Up to 25 different radio channels shall be available to be assigned to the multimode phase selector.
13. The multimode phase selector shall operate in a mode that shall vary the output based on the status of the approaching vehicle's turn signal. Additional outputs available on an Auxiliary Interface Panel may be needed. Settings shall be available for this mode as follows:
    a. Output mappings for each channel.
    b. Separate setting for high and low priority levels.
    c. Separate settings for each left turn, right turn or straight signal status for each of the four channels and priority levels.
14. The multimode phase selector's default values shall be programmable by the operator on-site or at a remote location.
15. The multimode phase selector shall be capable of three levels of signal discrimination, as follows:
    a. Verification of the presence of the signal of either High priority or Low priority.
    b. Verification that the vehicle is approaching the intersection within a prescribed Estimated Time of Arrival (ETA).
    c. Determination of when the vehicle is within the prescribed range, either by intensity level or distance from the intersection.
16. The multimode phase selector shall include one opto-isolated NPN output per channel that provides the following electrical signal to the appropriate pin on the card edge connector:
    a. 6.25Hz ± 0.1Hz 50% on/duty square wave in response to a Low priority call.
    b. A steady ON in response to a High priority call.
    c. The phase selector will also have the option of providing separate outputs for High and Low priority calls for controllers that do not recognize a 6.25 Hz pulsed Low priority request.
    d. Additional outputs or output modes shall also be available on the auxiliary interface panel.
17. The multimode phase selector shall accommodate three methods for setting range thresholds for High and Low priority signals:
    a. Based on the approaching vehicle's Estimated Time of Arrival (ETA). This shall be settable between 0 and 255 seconds in one second increments. The factory default shall be 30 seconds. The ETA threshold shall be independently settable by each of the following parameters: vehicle class, approach channel and priority level.
    b. Based on the approaching vehicle's distance from the intersection. This shall be settable between 0 and 5,000 feet in one foot increments. The factory default shall be 1000 feet. The distance threshold shall be independently settable by each of the following parameters: vehicle class, channel and priority level.

c. Based on infrared emitter intensity the system shall accommodate setting a separate range from 200 feet (61m) to 2,500 feet (762m) with 1,200 range set points for both High and Low priority signals.

18. The multimode phase selector will have the following indicators:
    a. A STATUS indicator that illuminates steadily to indicate proper operation.
    b. A link indicator on the multimode phase selector illuminates green if other radios are within range.
    c. A radio indicator that indicates the status of the communication between the vehicle control unit and the radio/GPS unit. The indicator illuminates amber to indicate that there is communication between the vehicle control unit and the radio/GPS unit. The indicator illuminates green to indicate that a GPS signal has been acquired and the 2.4 GHz radio is on the air.
    d. LED indicators (one for High priority, one for Low priority) for each channel display active calls as steady ON and pulse to indicate pending preemption requests.
19. The phase selector shall have a test switch for each channel to test proper operation of high or low priority.
20. The multimode phase selector shall utilize the time obtained from the GPS satellites to time stamp the activity logs. The user will set the local time zone (offset from GPS time) via the interface software.
21. The interface software shall have the capability to set the multimode phase selector to automatically adjust the GPS time offset for changes in daylight savings time.
22. An auxiliary interface panel shall be available to facilitate interconnections between the multimode phase selector and traffic cabinet wiring as well as provide additional outputs.
23. A multimode phase selector port may be configured to output GPS data at a user selectable baud rate in the NMEA 0183format. It will output the following messages (depending on the baud rate):
    a. GGA - Global Positioning System Fix Data (2400 baud and higher)
    b. GSA- GPS DOP and active satellites (2400 baud and higher)
    c. GSV - Satellites in view (4800 baud and higher)
    d. RMC - Recommended Minimum Navigation Information (1200 baud and higher)
24. For traffic controllers that are capable of interpreting GPS data in the NMEA 0183 serial format, this GPS data may be used to synchronize the controller's clock using the GPS date and time. Additionally, a discrete output from the phase selector may be used to reset the traffic controller using the clock reset function/input of the controller. This output shall be available on the Auxiliary Interface Panel. This output shall be referenced to the GPS date and time. This output may be configured as follows:
    a. Enabled or Disabled
    b. Time of day reset is activated (12:00 A. M. to 6:00 A.M. in 30 minute increments)
    c. Duration of reset pulse (100-2,000 milliseconds)
    d. Repeat every 1 to 30 days
25. The following diagnostic tests are incorporated in the multimode phase selector
    a. Power up built in test
    b. Communications port tests

c. Preemption output test call
d. Detector response test

26. The multimode phase selector shall be capable of call bridging. Call bridging enables the treatment of two vehicles requesting priority activation to have their calls linked together to hold a call to the controller so that they may traverse the approach together.
27. When used with a GPS radio unit, the multimode phase selector shall relay a priority request to the next adjacent intersection based on the direction indicated by the vehicle's turn signals.
28. The multimode phase selector shall support evacuation mode for low priority calls. Upon activation of this mode from the central management software, low priority vehicle calls shall be recognized by the multimode phase selector as if they were high priority vehicle calls for a temporary period of time as defined by the user. This mode shall be supported for both infrared and radio/GPS units. Vehicles transmitting high priority signals shall continue to maintain priority over the evacuation mode priority vehicles.
29. The multimode phase selector shall allow relative priority. Relative priority allows emitter classes to be used as an additional level of prioritization within priority levels (i.e. high and low priority levels have different sets of relative priorities). Relative priority shall support up to 16 unique classes in each priority level (High and Low). Relative priority class level 16 will have the highest weight and 1 the lowest weight in each. If relative priority is enabled, a priority call will be granted to the caller with the higher class level within high and low priority levels. A vehicle with a call granted, shall be able to have its call taken away by a higher level class vehicle. The system shall provide a lockout threshold that once met, shall disallow higher relative priority calls from taking away a call. Separate thresholds for infrared and Radio/GPS calls shall be provided. Infrared call thresholds shall be specified as an intensity with a default value of 1,000. Radio/GPS call thresholds shall be specified as an ETA in seconds. The default ETA shall be 12 seconds. Threshold values for both types of calls shall be settable via system software. High priority calls will always be served over low priority calls regardless of either's relative class. Preemption for vehicles with the same base priority (high, low) and the same relative priority is done using the default first come, first served mechanism. Relative priority is capable of being enabled or disabled using system software. Relative priority for high and low can be separately enabled or disabled using system software. The default settings for all relative priority (high and low) values will be 15. Relative priority shall be disabled by default for both high and low priority.

C. Intersection Radio/GPS Module

1. A GPS receiver and antenna will obtain the intersection position from the GPS satellite system operated by the DoD. The time information from the GPS satellites will be used to synchronize the frequency hopping of the 2.4 GHz radio and to time stamp the activity log. The GPS receiver and the GPS antenna will reside inside of the radio/GPS module.
2. A 2.4 GHz spread spectrum/frequency hopping radio will provide the communications from the intersection to the vehicle as well as from intersection to intersection. The radio shall have a maximum transmit power

of not more than 1 watt. The radio shall have an unobstructed range of at least 2,500 feet (762 m). The radio will meet FCC Part 15 rules. The radio and the radio antenna will reside inside of the radio/GPS module.

3. The radio/GPS module will be housed in a white, impact resistant polycarbonate housing that will include a water resistant wire entry point. It will contain a water resistant access cover to facilitate cable termination.
4. The radio/GPS module will be designed for mounting at or near an intersection on mast arms and span wire poles. Additional hardware may be needed.
5. The radio/GPS module will communicate to the phase selector via a radio/GPS cable up to 250 feet (76 m) in length.
6. As an alternate the following radio/GPS unit and radio GPS antenna, may be used in the intersection.
7. The radio/GPS module will have dimensions of no greater than 4.5 inches (11.4 cm) wide by 2.75 inches (7.0 cm) high by 8.0 inches (20.3 cm) long. This module may also be used in the intersection.
8. The radio/GPS antenna will be a hemispherical dome with a height of 1.43” (3.6 cm) a diameter of 2.85” (7.2 cm) with a pair of 15’ (4.6 m) coax cables with factory terminated SMA connectors. One of these connectors will have a pin and the other will have a socket. This antenna will include one element for receiving the GPS signal and one element for transmitting and receiving the radio signal. This antenna (along with the radio/GPS module described in paragraph 5 above) may also be used in the intersection.

D. Radio/GPS Cable

1. The radio/GPS cable will deliver sufficient power from the phase selector to the radio/GPS module and will deliver the necessary quality signal from the radio/GPS module to the phase selector over a non-spliced distance of 250 feet (76 m). Use of coaxial cable is not permitted for this cable.
2. The radio/GPS cable will deliver sufficient power from the vehicle control unit to the radio/GPS module and will deliver the necessary quality signal from the radio/GPS module to the vehicle control unit over a non-spliced distance of 50 feet (15 m).
3. The cable will be of durable construction to satisfy the following installations:
   a. Direct burial.
   b. Conduit and mast arm.
   c. Exposed overhead (supported by messenger wire).
4. The outside diameter of the cable will not exceed 0.4 inches (10.16 mm).
5. The insulation rating of the cable will be 300 volts minimum.
6. The temperature rating of the detector cable will be -40°F (-40°C) to +194ºF (+90ºC).
7. The conductors will be AWG #20 (7x28) stranded and individually tinned. The cable will be shielded and have a drain wire to provide signal integrity and transient protection.
8. The radio/GPS cable wires shall be color coded as follows:
   a. Yellow/Yellow-Black dot for Radio transmit.
   b. Blue/Blue-White dot for Radio receive.
   c. Orange/Orange-Green dot for Radio clock.
   d. Brown/Brown-White dot for GPS power and common.

e. Violet/Violet-White dot for Radio power and common.
f. Bare for shield drain.

9. When the aluminum enclosure version of the radio/GPS module is used, a radio/GPS cable assembly using the above cable with a 15-pin connector that will mate with the connector on the radio/GPS module will be used.

E. Card Rack

1. The required card rack will provide simplified installation of a phase selector into controller cabinets that do not already have a suitable card rack.
2. The card rack will be factory wired with one connector, located behind the card slot, and one connector on the front of the card rack.
3. The card rack connector on the front will provide for connections to the traffic controller.
4. One version of the card rack will contain a 24 VDC power supply to power the phase selector. The power supply will be capable of being powered by 100-240 VAC 50-60 Hz.
5. Another version of the card rack will pass 120 VAC through to the rear card rack connector. This version will provide labeled terminal blocks for connecting the primary infrared detectors to a phase selector.
6. Additionally there shall be an optional card rack with a built-in electromechanical relay for use in switching high current loads such as flashers and gate operators. The relay shall be capable of switching the following loads.
   a. Resistive
      1) 10 A, 240 VAC
      2) 10 A, 30 VDC
   b. General Use
      1) 7.5 A, 120 VAC
      2) 7.5 A, 240 VAC
      3) 7 A, 30 VDC
      4) 1/6 hP, 120 VAC
      5) 1/3 hP, 240 VAC

PART 3 - EXECUTION

3.01 Installation

A. The optical preemption traffic signal control system shall be installed in accordance with the manufacturers recommended specifications as laid out in the installation manual.

PART 4 - FIGURES

Not Used.

END OF SECTION 13550

SECTION 13560 – ORNAMENTAL LIGHTING

PART 1 - GENERAL

1.01 Summary

A. Section Includes: Furnishing, installing and maintaining all permanent street lighting per the Town's Standards and Specifications. Propriety street lighting equipment shall be a matched system by Spring City Electrical Manufacturing Company, Mount View (Modified) 20'-11" lamp post with the davit signal cross arm and the Columbia (LED) luminaire. The ornamental light installation shall include excavation, foundations, hand holes, service points and other necessary components to provide a complete system. See Standard Detail TR-23.

1.02 Warranty

A. Each component shall be covered by the manufacturer's standard warranty.

B. A copy of the manufacturer's written warranties will be supplied prior to acceptance by the Town of Brownsburg.

PART 2 - PRODUCTS

2.01 Products

A. Equipment

1. The ornamental light installation shall be a matched component system per Article 1.01-A.

PART 3 - EXECUTION

Not Used.

PART 4 - FIGURES

4.01 Associated Standard Details

Detail No.	Description
TR-23	Ornamental Lighting Detail

END OF SECTION 13560

SECTION 13575 – PEDESTRIAN PUSH BUTTON SYSTEM

PART 1 - GENERAL

1.01 Summary

A. Section Includes: Furnishing, installing and maintaining all permanent pedestrian push button equipment. Equipment shall be a matched system that includes all necessary components to provide a complete system. This equipment shall be installed with all new or updated pedestrian signals.

1.02 Warranty

A. The manufacturer of the required pedestrian push button system will warrant that, provided the pedestrian push button system has been properly installed, operated and maintained, component parts of a matched component system that prove to be defective in workmanship and/or material during the first five (5) years from the date of shipment from the manufacturer.

B. A copy of the manufacturer's written warranty will be supplied prior to acceptance by the Town of Brownsburg.

PART 2 - PRODUCTS

2.01 Products

A. Equipment

1. The pedestrian push button system shall include the Polara EZ 2 Communicator Push Button Station, Polara EZ2 Communicator Central Control Unit, software, and all other necessary components and wiring to provide a complete system.

PART 3 - EXECUTION

Not Used.

PART 4 - FIGURES

Not Used.

END OF SECTION 13575

CONSTRUCTION DETAILS

GE - GENERAL

TABLE OF CONTENTS

General Utility Location Plan & Section GE-01
Minimum Crossover and Separation Requirements for Sewer & Water Mains GE-02
Gravity Sewer Repair GE-03

TOWN OF Brownsburg

MAY 2013

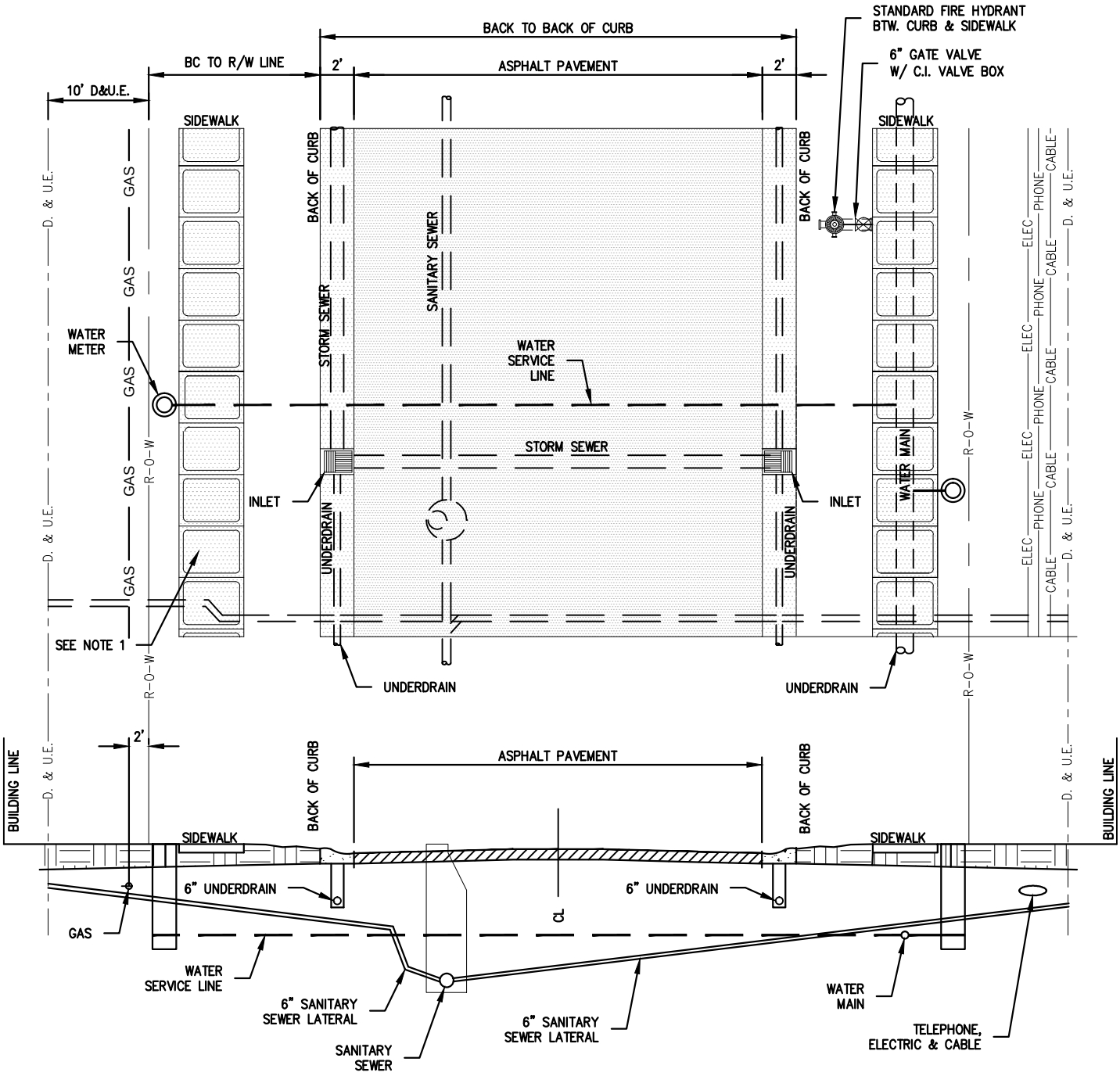

NOTES:

1. MANHOLES MAY BE LOCATED IN STREET, 5' FROM EDGE OF PAVEMENT.
2. LOCATE ALL PRIVATE UTILITIES OUTSIDE PUBLIC RIGHT-OF-WAY.
3. TERMINATE PRIVATE SERVICE LATERALS BETWEEN THE DRAINAGE & UTILITY EASEMENT AND BUILDING SETBACK LINE.
4. IN ORDER TO REDUCE THE NUMBER OF ROAD CUTS, THE TOWN PREFERS PRIVATE SERVICE LATERALS FOR ADJACENT LOTS TO BE PLACED IN THE SAME TRENCH, BEGINNING AT THE WYE CONNECTION TO THE SEWER MAIN AND TERMINATING AT THE ADJOINING PROPERTY LINE AS DESCRIED IN NOTE 3.

GENERAL UTILITY LOCATION PLAN & SECTION

NO SCALE

DETAIL NO. GE-01
REVISION DATE: MAY 2013

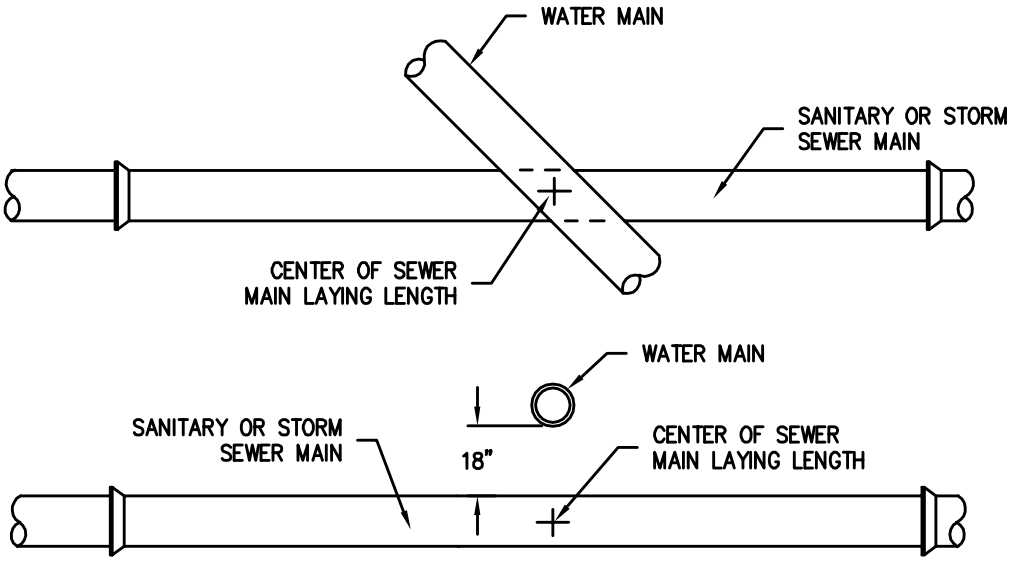

NOTES:
1. WATER MAIN AND SEWER MINIMUM SEPARATION: 18" VERTICAL SEPARATION 10'-0" HORIZONTAL SEPARATION.

MINIMUM CROSSOVER AND SEPARATION REQUIREMENTS FOR SEWER & WATER MAINS

NO SCALE

DETAIL NO. GE-02
REVISION DATE: MAY 2013

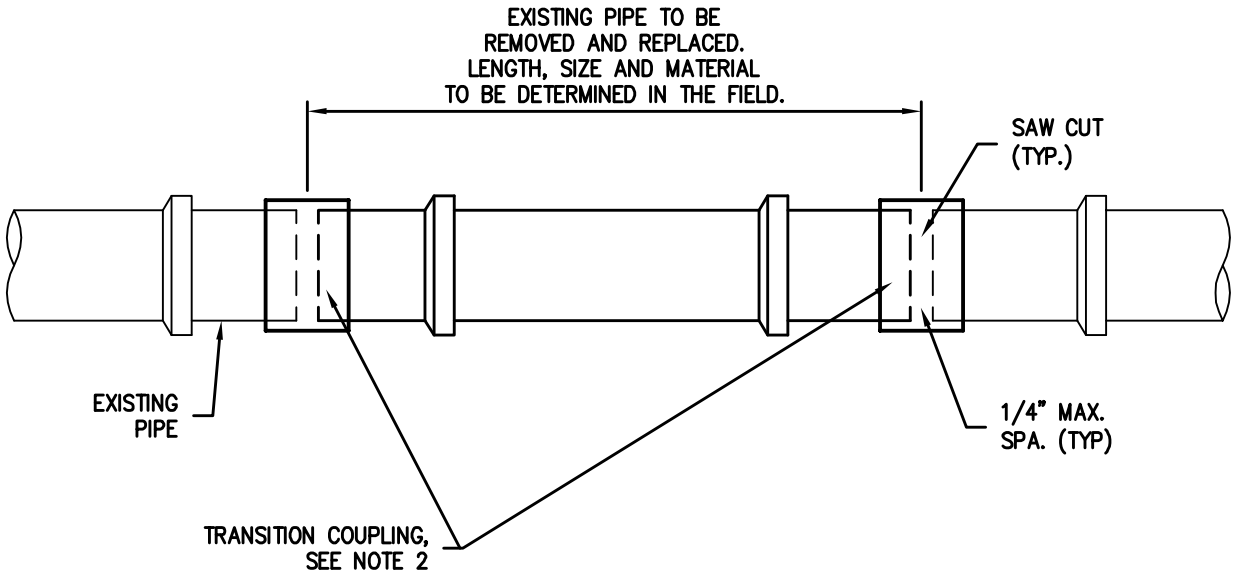

NOTES:

1. PIPE BEDDING AND BACKFILL SHALL BE AS SHOWN IN PIPE TRENCH DETAILS FOR THE PIPE MATERIAL AND SIZE.

2. TRANSITION COUPLING FOR PVC TO PVC REPAIRS SHALL BE PVC REPAIR SLEEVE. TRANSITION COUPLING FOR ALL OTHER PIPE REPAIRS SHALL BE "FERNCO" COUPLING, OR APPROVED EQUAL, WITH STAINLESS STEEL BANDS.

GRAVITY SEWER REPAIR

NO SCALE

DETAIL NO. GE-03
REVISION DATE: MAY 2013

CONSTRUCTION DETAILS

EC - EROSION AND SEDIMENT CONTROL

TABLE OF CONTENTS

Individual Building Lot EC-01
Silt Fence EC-02

TOWN OF Brownsburg

MAY 2013

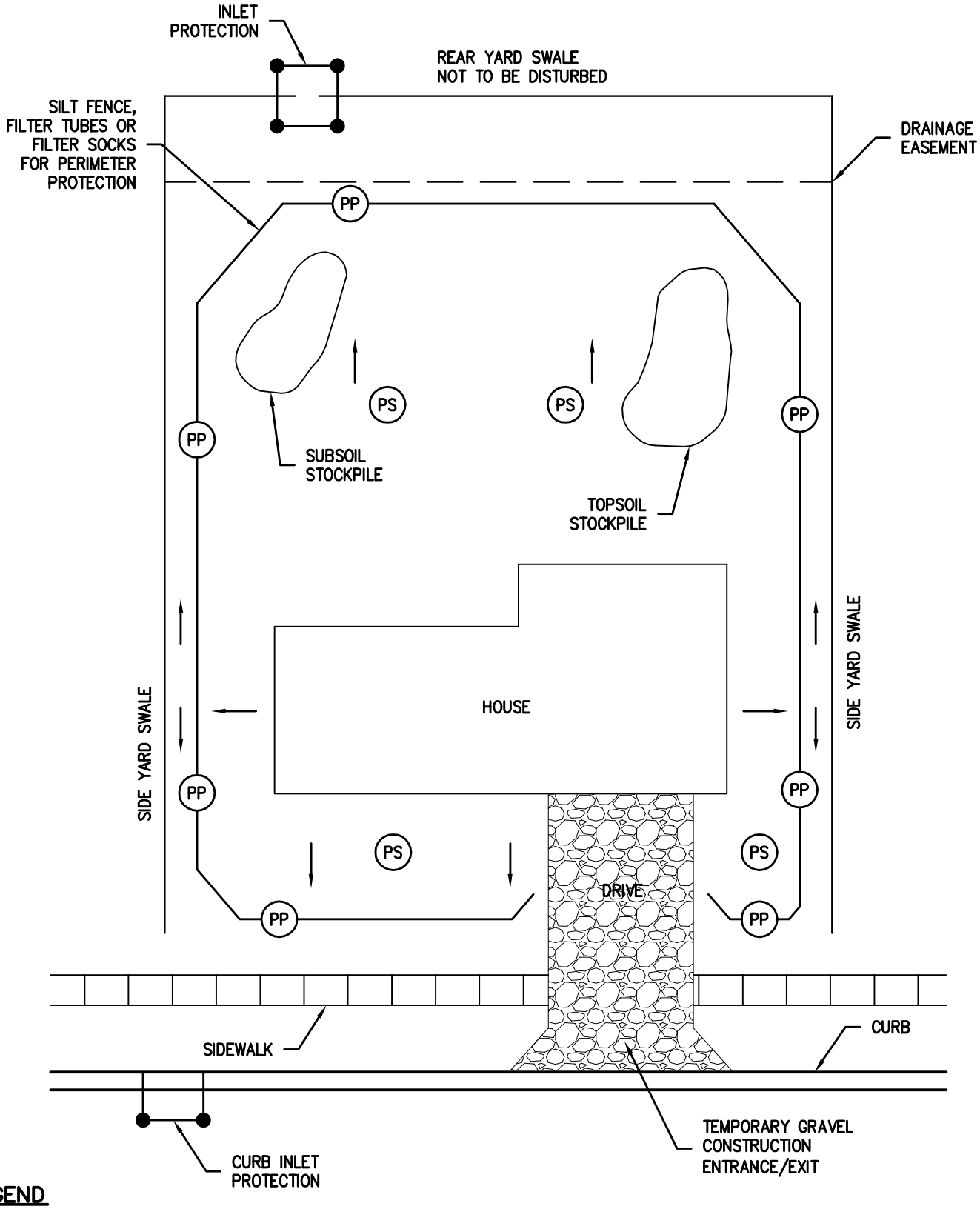

LEGEND

- (PS) PERMANENT SEEDING
- → DRAINAGE FLOW
- (PP) PERIMETER PROTECTION

INDIVIDUAL BUILDING LOT

NO SCALE

DETAIL NO. EC-01
REVISION DATE: MAY 2013

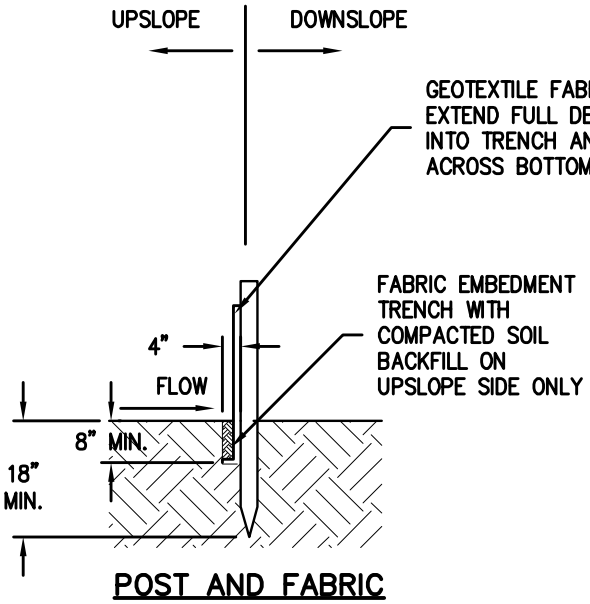

POST AND FABRIC EMBEDMENT

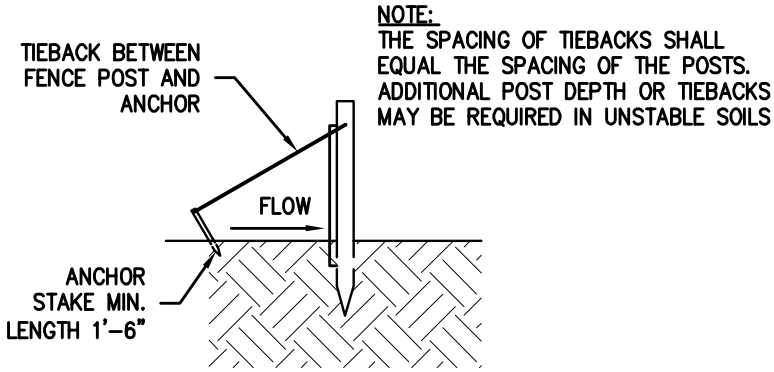

NOTE:
THE SPACING OF TIEBACKS SHALL EQUAL THE SPACING OF THE POSTS. ADDITIONAL POST DEPTH OR TIEBACKS MAY BE REQUIRED IN UNSTABLE SOILS

POST TIEBACK

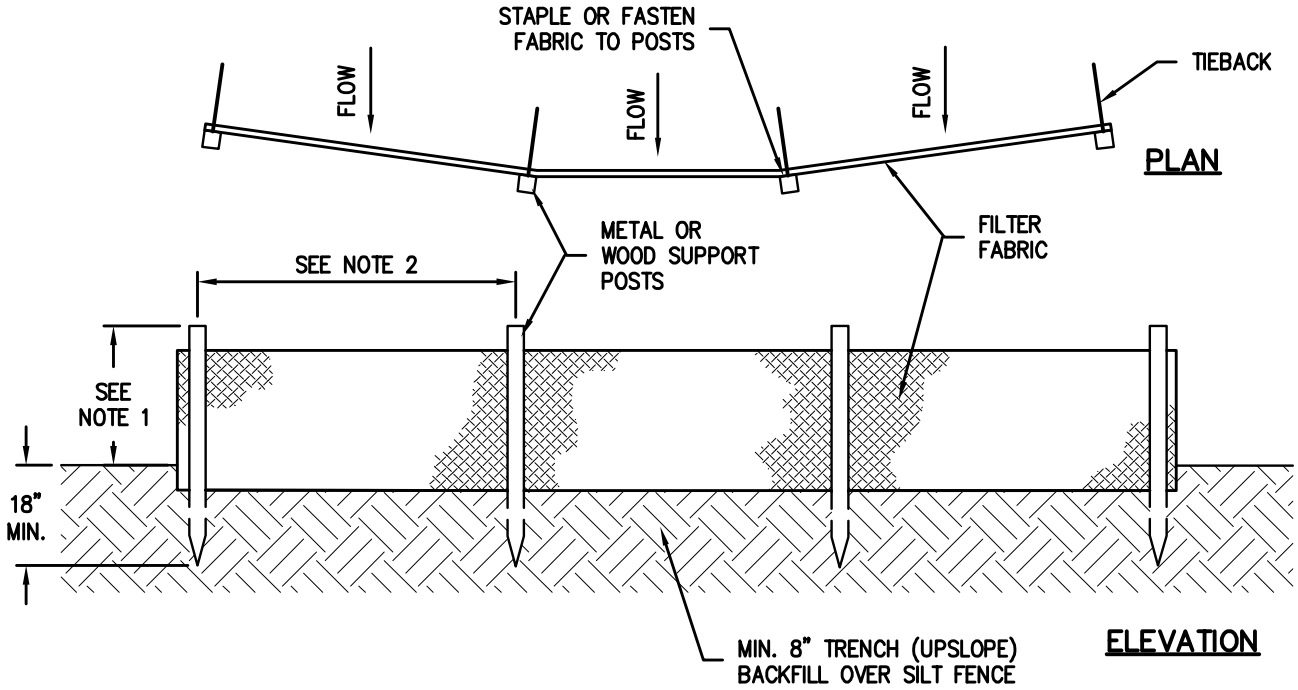

NOTES:

1. THE HEIGHT OF THE BARRIER SHALL BE A MINIMUM OF 18" AND A MAXIMUM OF 30".
2. POSTS SHALL BE SPACED A MAXIMUM OF 6 FEET APART AT THE BARRIER LOCATION AND DRIVEN SECURELY INTO THE GROUND (MINIMUM OF 18 INCHES). WHEN STANDARD STRENGTH FABRIC IS USED WITH THE WIRE SUPPORT FENCE, POST SPACING SHALL NOT EXCEED 8 FEET.

SILT FENCE

NO SCALE

DETAIL NO. EC-02
REVISION DATE: MAY 2013

CONSTRUCTION DETAILS

EW - EARTHWORK

TABLE OF CONTENTS

Side Yard Swale EW-01
Turf Armored Ditch EW-02
Hard Armored Ditch EW-03
Detention/Retention Ponds EW-04

TOWN OF Brownsburg

MAY 2013

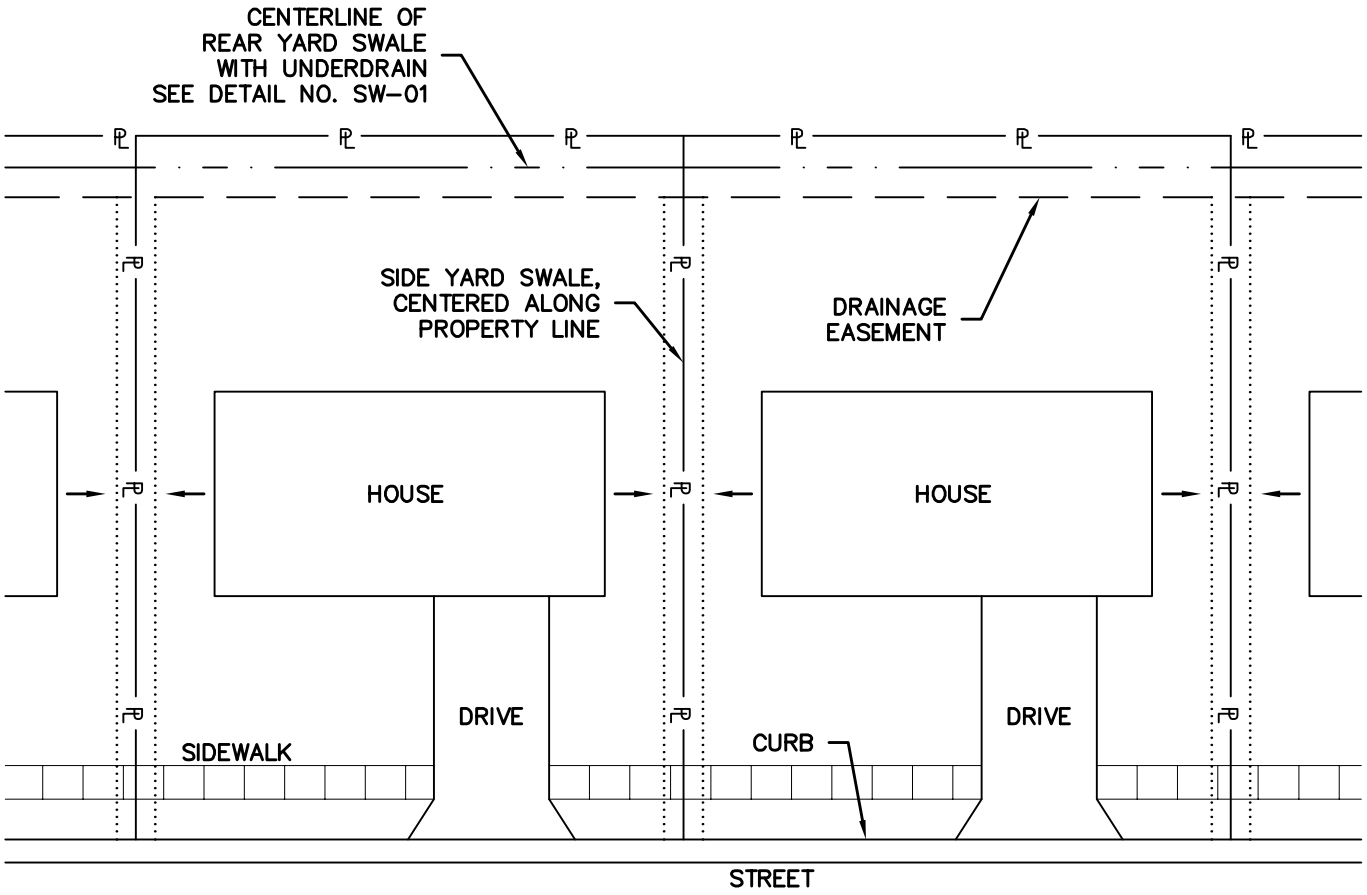

PLAN VIEW

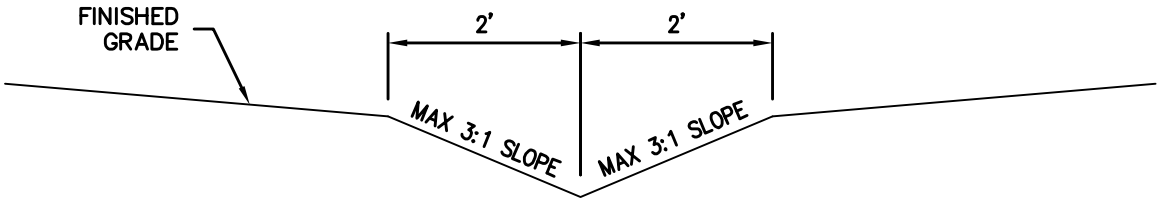

SECTION VIEW

NOTES:
1. SIDE YARD AND REAR YARD SWALES WITH PERCENT SLOPE AND FLOW DIRECTION MUST BE SHOWN ON GRADING PLAN.

SIDE YARD SWALE

NO SCALE

DETAIL NO. EW-01
REVISION DATE: MAY 2013

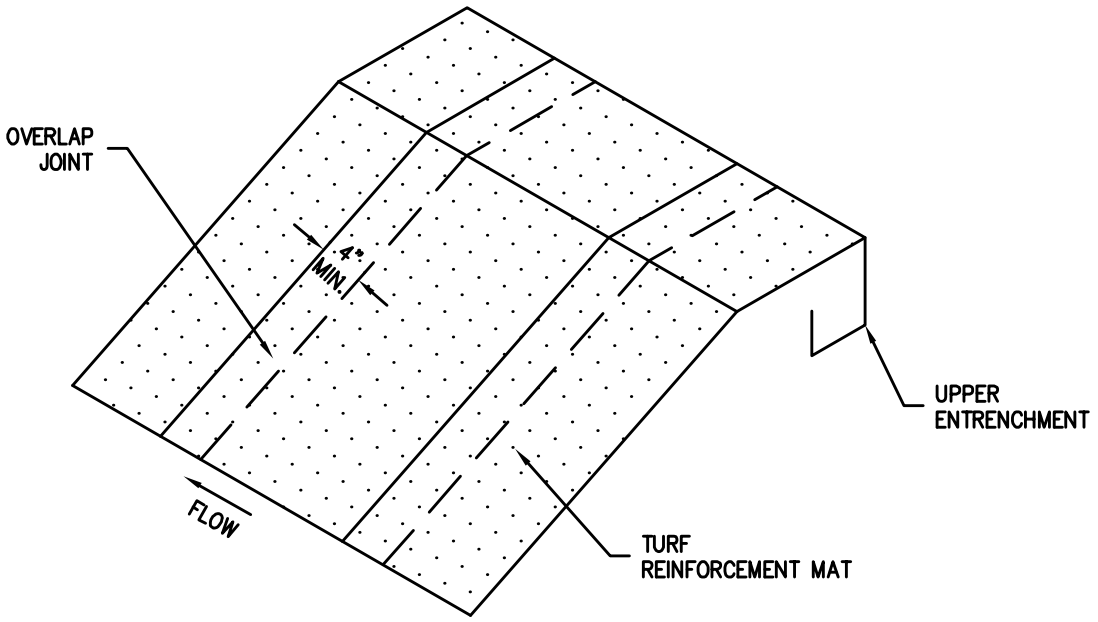

ISOMETRIC VIEW

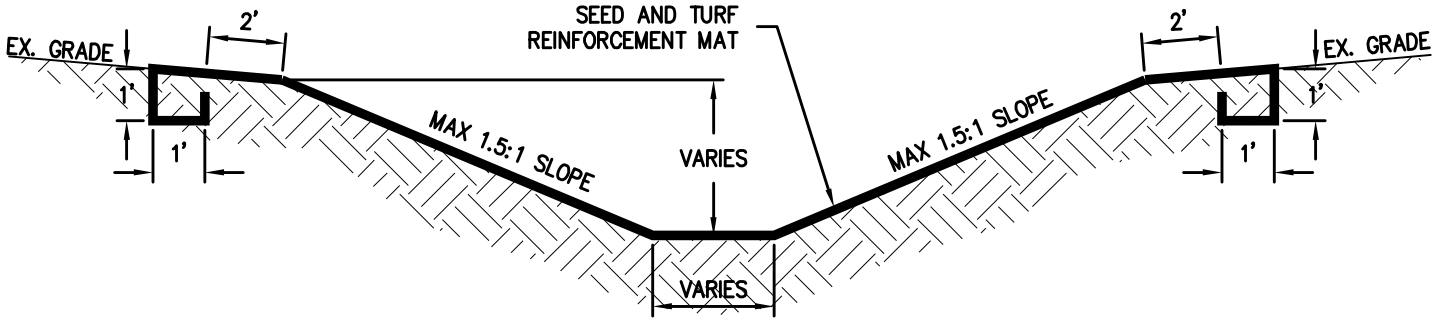

SECTION VIEW

NOTES:

1. FOR LOW FLOWS WHICH DO NOT REQUIRE SCOUR PROTECTION AND STEEP SIDE SLOPES (3:1 OR STEEPER), PROVIDE BIODEGRADABLE TURF REINFORCEMENT MAT.

2. FOR HIGH FLOWS REQUIRING SCOUR PROTECTION AT ALL SIDE SLOPE GRADES, PROVIDE PERMANENT TURF REINFORCEMENT MAT.

TURF ARMORED DITCH

NO SCALE

DETAIL NO. EW-02
REVISION DATE: MAY 2013

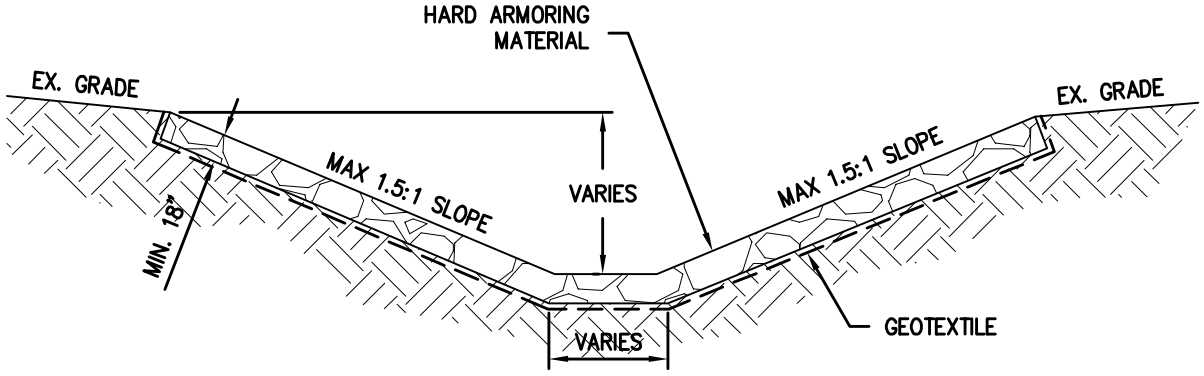

NOTES:

1. TURF ARMORING IS PREFFERED METHOD OF SCOUR PROTECTION AND BANK STABILIZATION, WHERE APPLICABLE.

2. PROVIDE RIPRAP (REVETMENT, CLASS I, OR CLASS II GRADATION PER INDOT) OR ARMORFLEX HARD ARMOR.

HARD ARMORED DITCH

NO SCALE

DETAIL NO. EW-03
REVISION DATE: MAY 2013

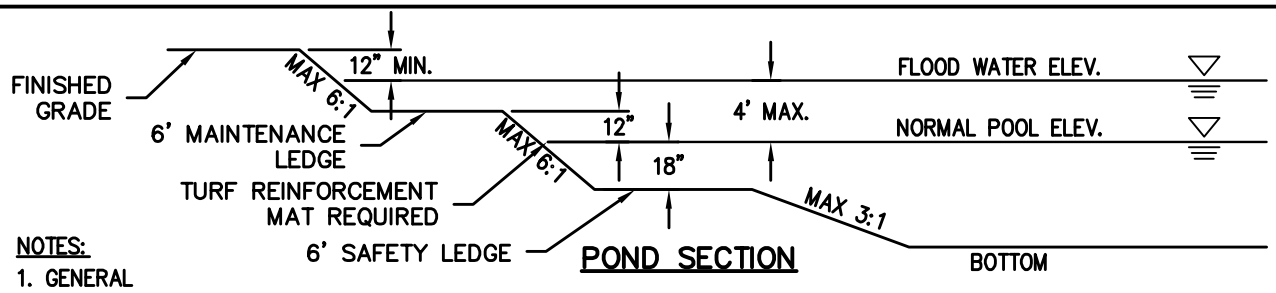

NOTES:

1. GENERAL
   A. DETENTION/RETENTION PONDS SHALL MEET THE REQUIREMENTS OF THE HENDRICKS COUNTY STORMWATER TECHNICAL STANDARDS MANUAL UNLESS OTHERWISE NOTED.

2. ACCESS
   A. PROVIDE INGRESS AND EGRESS FROM A NEARBY ROAD INTO THE POND.

3. PRETREATMENT
   A. STORMWATER TREATMENT QUALITY UNIT REQUIRED UPSTREAM OF ALL DETENTION/RETENTION PONDS.

4. INLET PIPING
   A. SUBMERGED INLET PIPES ARE PREFERRED. THE LOWEST PIPE INVERT AT THE FIRST UPSTREAM STORM SEWER STRUCTURE SHALL NOT BE LOWER THAN THE NORMAL POOL ELEVATION OF THE POND.
   B. EXPOSED INLET PIPES REQUIRE TRASH GUARD PROTECTION ON END OF PIPE END SECTION. REFER TO DETAIL NO. SW-10.

5. OUTLET
   A. THE OUTLET CONTROL STRUCTURE AND PIPING SHALL BE DESIGNED TO OPERATE SIMPLY AND EFFECTIVELY WITH MINIMAL MAINTENANCE. THE OUTLET STRUCTURE SHALL BE POSITIONED IN AN ACCESSIBLE LOCATION FOR MAINTENANCE.
   B. OUTLET LOCATION MUST BE APPROVED BY THE TOWN OF BROWNSBURG.

6. RETENTION (WET) POND DESIGN
   A. MAXIMUM GROUND SLOPE AND POND DIMENSIONS SHALL BE AS SHOWN.
   B. POND DESIGN SHALL INCLUDE METHOD TO PREVENT STAGNATION OF WATER. SUBMERGED AERATION EQUIPMENT IS PREFERRED. FOUNTAINS AND SURFACE AERATION ARE NOT EFFECTIVE. EACH POND SHALL BE REVIEWED BY THE TOWN ON AN INDIVIDUAL BASIS.
   C. STORAGE OF STORMWATER ON ROADWAYS IS NOT ACCEPTABLE FOR ANY STORM EVENT.

7. DETENTION (DRY) POND DESIGN
   A. AN UNDERDRAIN IS REQUIRED.
   B. MAXIMUM GROUND SLOPE SHALL BE 4H:1V. PROTECT SIDE SLOPES WITH TURF REINFORCEMENT MAT.
   C. STORAGE OF STORMWATER ON ROADWAYS IS NOT ACCEPTABLE FOR ANY STORM EVENT.

8. POND SAFETY SIGNS
   A. PROVIDE SIGN WITH MINIMUM SIGN AREA OF 1 SQ. FT. AND A MAXIMUM SIGN AREA OF 4 SQ. FT.
   B. SIGN MUST BE CONSTRUCTED OF A PERMANENT MATERIAL, EITHER WOOD OR METAL.
   C. AT MINIMUM, POND SAFETY SIGNS MUST HAVE THE WORDS "DANGER", "NO SWIMMING", "STAY OFF ICE" AND MUST HAVE "NO SWIMMING" AND "STAY OFF ICE" SYMBOLS. WARNING MAY ALSO PROHIBIT TRESPASSING, WADING OR OTHER RECREATIONAL ACTIVITIES THAT WOULD INVOLVE A PERSON ENTERING A POND.
   D. THE SIGN COLOR WILL BE DETERMINED BY THE HOMEOWNERS' ASSOCIATION OR DEVELOPER.
   E. INSTALL SIGNS NO MORE THAN 500 FEET APART. IF POND HAS LESS THAN 3,000 SQ. FT. OF WATER SURFACE AREA, A MINIMUMOF 2 SIGNS ARE REQUIRED. IF POND HAS GREATER THAN 3,000 SQ. FT. OF WATER SURFACE AREA, A MINIMUM OF 4 SIGNS ARE REQUIRED. A SIGN MUST BE PLACED AT ALL PUBLIC ACCESS AREAS TO THE POND.
   F. EACH DEVELOPER OF THE CONSTRUCTION AREA AND SUBSEQUENT HOMEOWNERS' ASSOCIATION OR PROPERTY OWNERS' ASSOCIATION SHALL BE RESPONSIBLE FOR THE COST OF MAINTENANCE AND REPLACEMENT IF THEIR POND SAFETY SIGN(S) MUST BE REPLACED FOR ANY REASON.

9. MAINTENANCE
   A. A PERPETUAL MAINTENANCE AGREEMENT SHALL BE REQUIRED WITH THE TOWN OF BROWNSBURG TO INCLUDE ALL COMPONENTS OF POND OPERATION AND MAINTENANCE. THE OPERATION AND MAINTENANCE (O&M) MANUAL FOR POST-CONSTRUCTION WATER QUALITY MEASURES, AS REQUIRED UNDER THE TOWNS STORMWATER MANAGEMENT ORDIANANCE (CHAPTER 151), SHALL BE AN INTEGRAL COMPONENT OF THE PERPETUAL MAINTENANCE AGREEMENT.
   B. POND MAINTENANCE INCLUDING, BUT NOT LIMITED TO, REMOVAL OF TRASH AND UNSIGHTLY VEGETATIVE GROWTH, MOWING, LANDSCAPING, AERATION, BANK PROTECTION, FOREBAY CLEAN-OUT, AND SEDIMENT REMOVAL SHALL BE CONTINUOUS FOR ALL DEVELOPMENTS.

DETENTION/RETENTION PONDS

NO SCALE

DETAIL NO. EW-04
REVISION DATE: MAY 2013

CONSTRUCTION DETAILS

OT - OPEN TRENCH INSTALLATIONS

TABLE OF CONTENTS

Rigid Pressure Pipe Trench OT-01
Rigid Gravity Pipe Trench OT-02
Flexible Pressure Pipe Trench OT-03
Flexible Gravity Pipe Trench OT-04

TOWN OF Brownsburg

MAY 2013

PIPE SIZE	12" TO 15"	18" TO 30"	36" & OVER
BEDDING BELOW THE PIPE BARREL	4"	O.D. / 4	8"

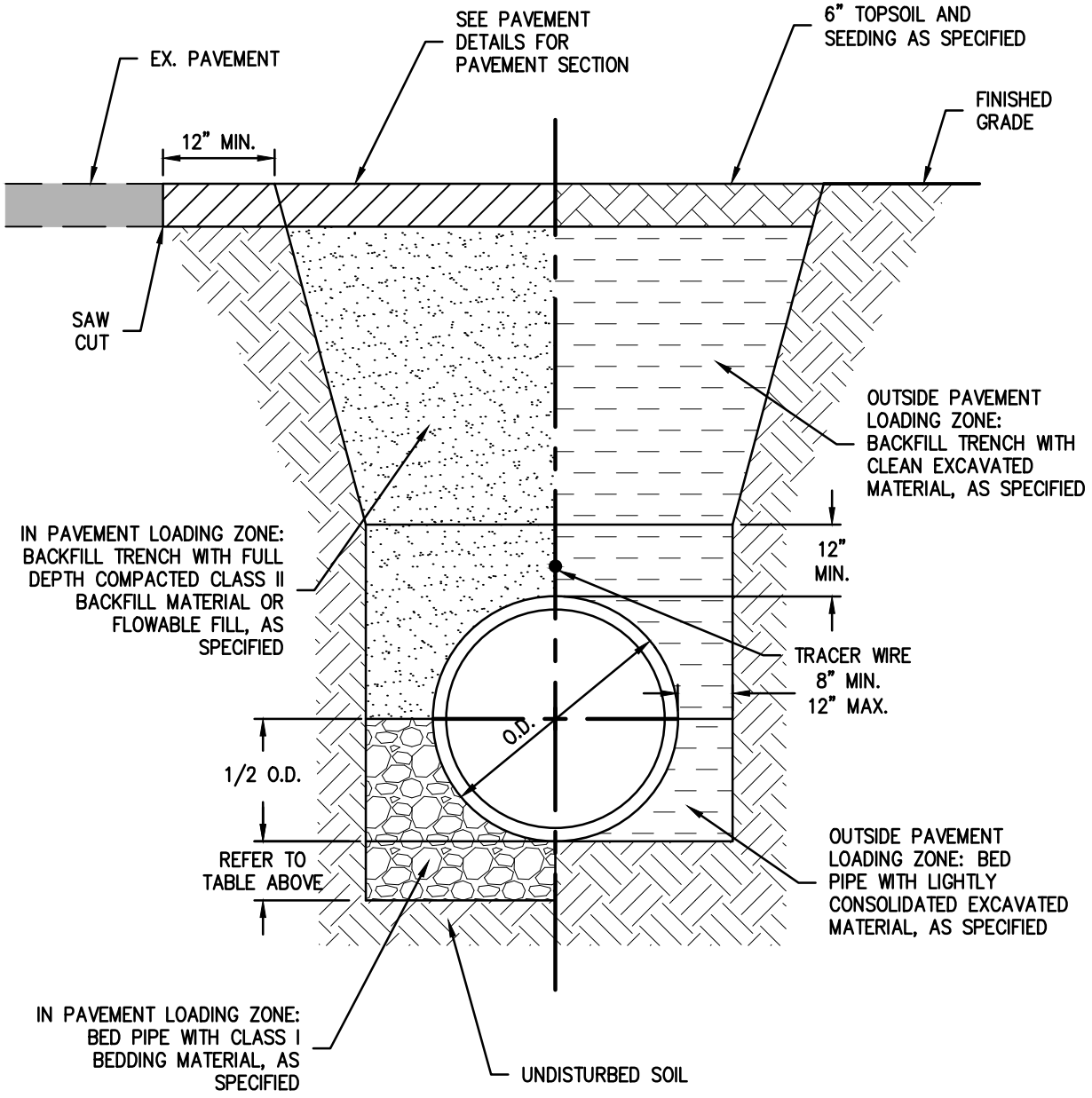

NOTES:
1. RIGID PIPE MATERIALS FOR WATER MAINS AND FORCE MAINS INCLUDE DUCTILE IRON PIPE.

RIGID PRESSURE PIPE TRENCH

NO SCALE

DETAIL NO. OT-01
REVISION DATE: MAY 2013

PIPE SIZE	12" TO 15"	18" TO 30"	36" & OVER
BEDDING BELOW THE PIPE BARREL	4"	O.D. / 4	8"

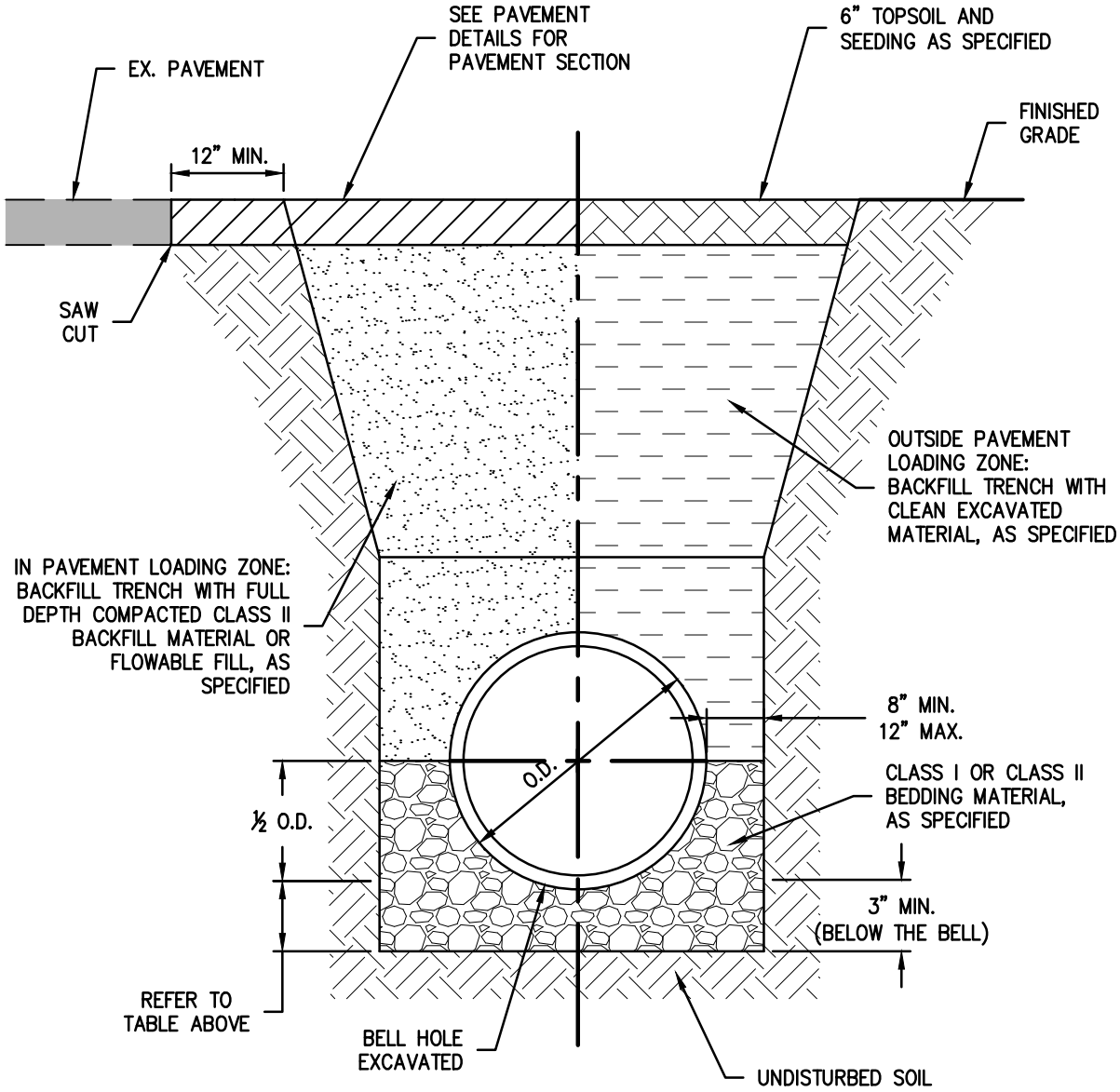

NOTES:

1. RIGID PIPE MATERIALS FOR STORM SEWERS INCLUDE DUCTILE IRON AND REINFORCED CONCRETE PIPE (RCP).
2. RIGID PIPE MATERIALS FOR SANITARY SEWERS INCLUDE DUCTILE IRON PIPE.

RIGID GRAVITY PIPE TRENCH

NO SCALE

DETAIL NO. OT-02
REVISION DATE: MAY 2013

PIPE SIZE	12" TO 15"	18" TO 30"	36" & OVER
BEDDING BELOW THE PIPE BARREL	4"	O.D. / 4	8"

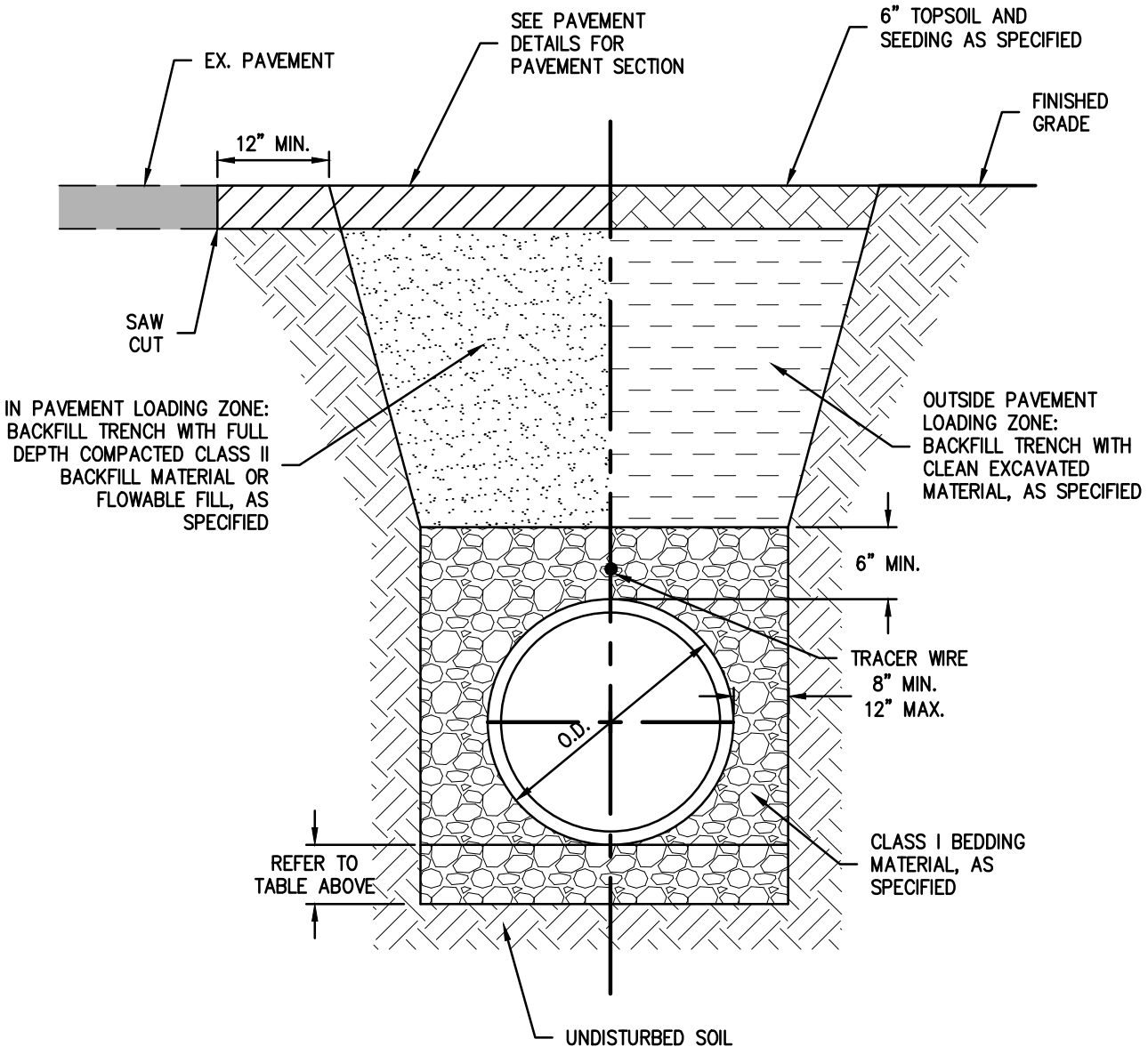

NOTES:
1. FLEXIBLE PIPE MATERIALS FOR FORCE MAINS INCLUDE POLYVINYL CHLORIDE (PVC) PIPE.

FLEXIBLE PRESSURE PIPE TRENCH

NO SCALE

DETAIL NO. OT-03
REVISION DATE: MAY 2013

PIPE SIZE	12" TO 15"	18" TO 30"	36" & OVER
BEDDING BELOW THE PIPE BARREL	4"	O.D. / 4	8"

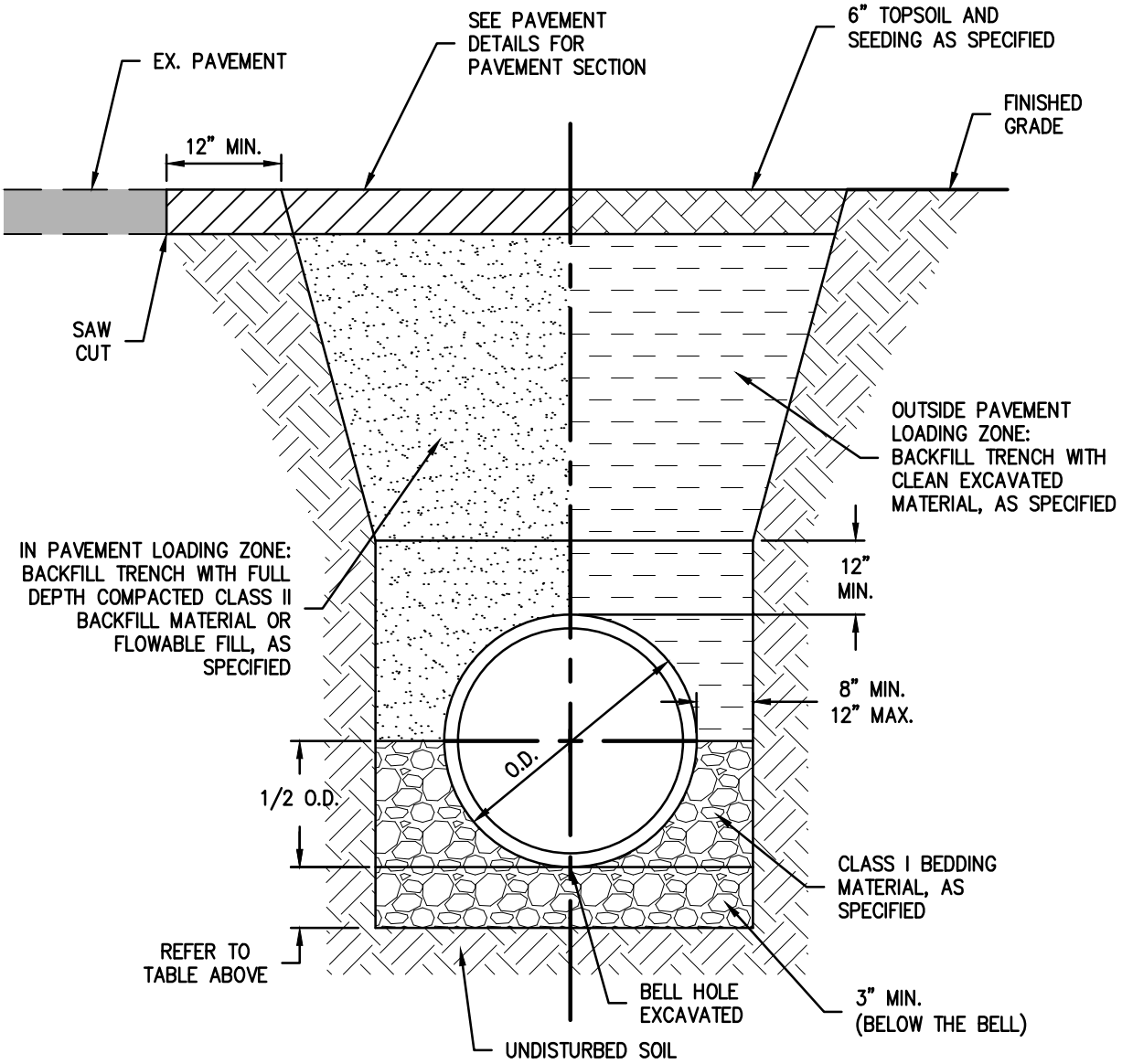

NOTES:

1. INSTALLATION OF FLEXIBLE PIPE SHALL BE IN ACCORDANCE WITH ASTM D2321.
2. FLEXIBLE PIPE MATERIALS FOR STORM SEWERS INCLUDE HIGH DENSITY POLYETHYLENE (HDPE), POLYPROPYLENE, AND POLYVINYL CHLORIDE (PVC) PIPE.
3. FLEXIBLE PIPE MATERIALS FOR SANITARY SEWERS INCLUDE POLYVINYL CHLORIDE (PVC) PIPE.

FLEXIBLE GRAVITY PIPE TRENCH

NO SCALE

DETAIL NO. OT-04
REVISION DATE: MAY 2013

CONSTRUCTION DETAILS

TL - TRENCHLESS INSTALLATIONS

TABLE OF CONTENTS

Casing Pipe TL-01
Casing Spacer Detail TL-02
Pressure Pipe Crossing Waterway TL-03
Pressure Pipe Crossing Roadway/Railroad TL-04
Gravity Pipe Crossing Waterway TL-05
Gravity Pipe Crossing Roadway/Railroad TL-06

TOWN OF Brownsburg

MAY 2013

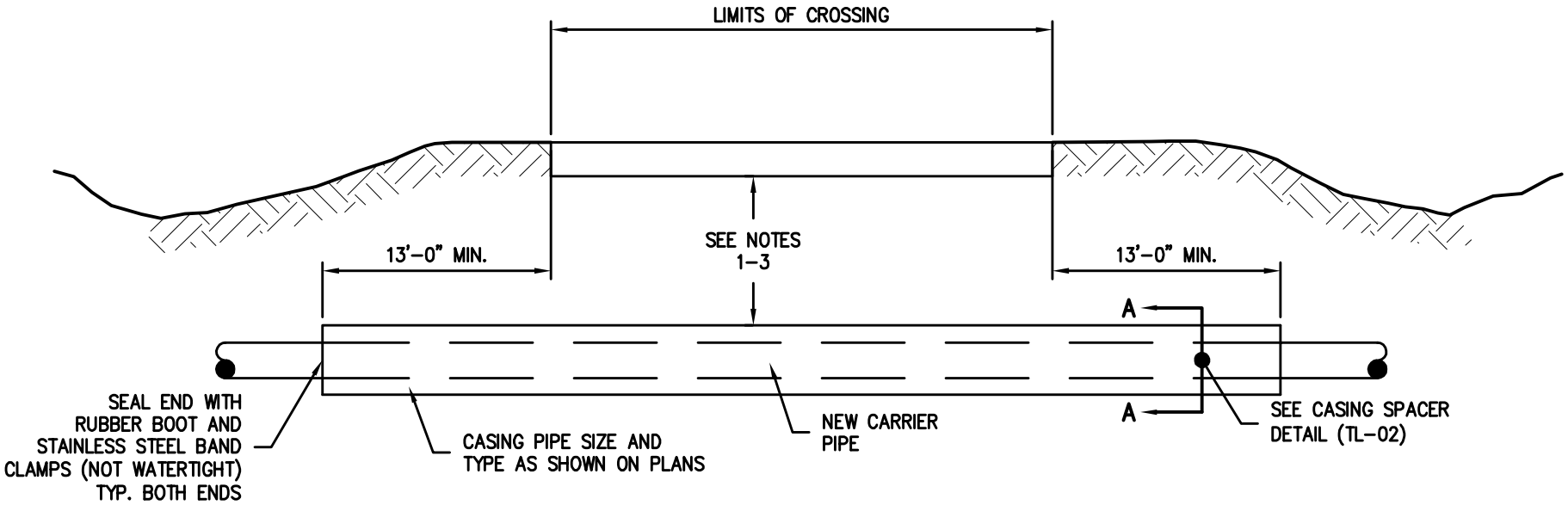

NOTES:

1. WATERWAY CROSSINGS: CASING PIPE SHALL BE AT LEAST 5'–0" BELOW WATERWAY BOTTOM.

2. HIGHWAY/ROADWAY CROSSINGS: CASING PIPE SHALL BE AT LEAST 4'–6" BELOW ROADWAY SUBBASE.

3. RAILROAD CROSSINGS: CASING PIPE SHALL BE AT LEAST 5'–6" BELOW BASE OF RAILS.

DETAIL NO. TL–01
REVISION DATE: MAY 2013

CASING PIPE

NO SCALE

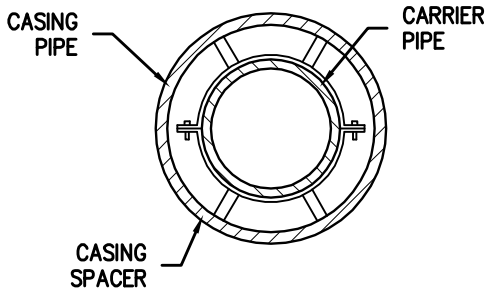

CASING SPACER DETAIL

NO SCALE

DETAIL NO. TL-02
REVISION DATE: MAY 2013

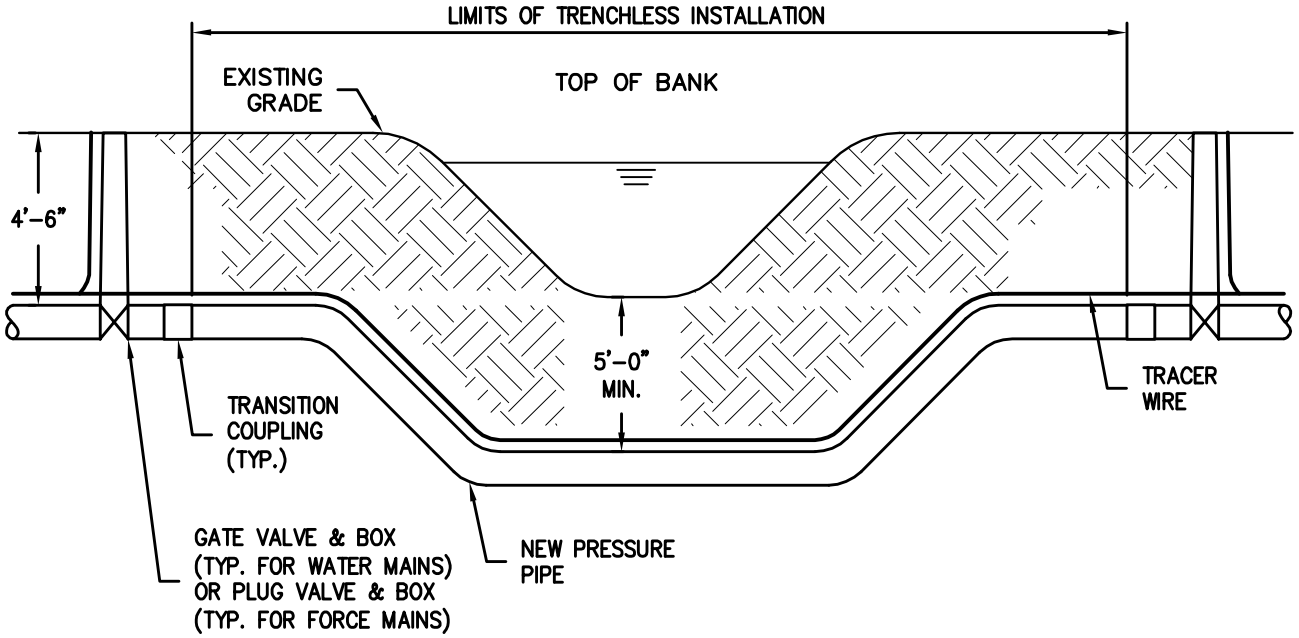

PRESSURE PIPE CROSSING WATERWAY

NO SCALE

DETAIL NO. TL-03
REVISION DATE: MAY 2013

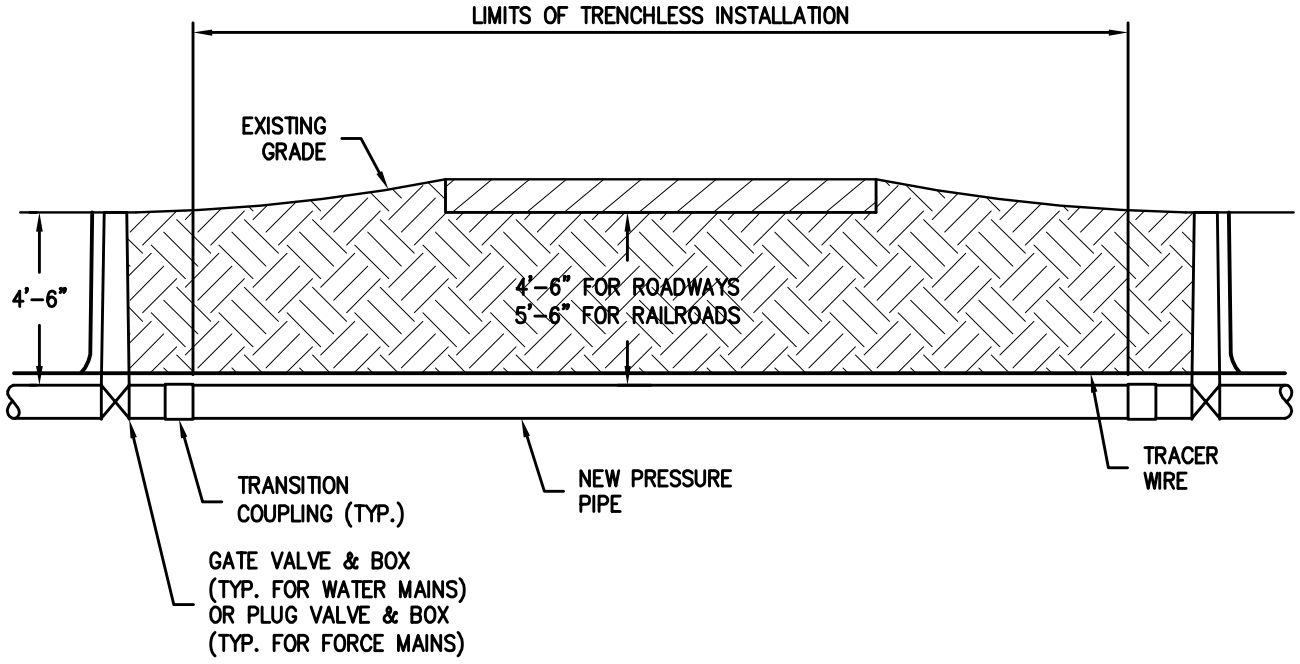

PRESSURE PIPE CROSSING ROADWAY/RAILROAD

NO SCALE

DETAIL NO. TL-04
REVISION DATE: MAY 2013

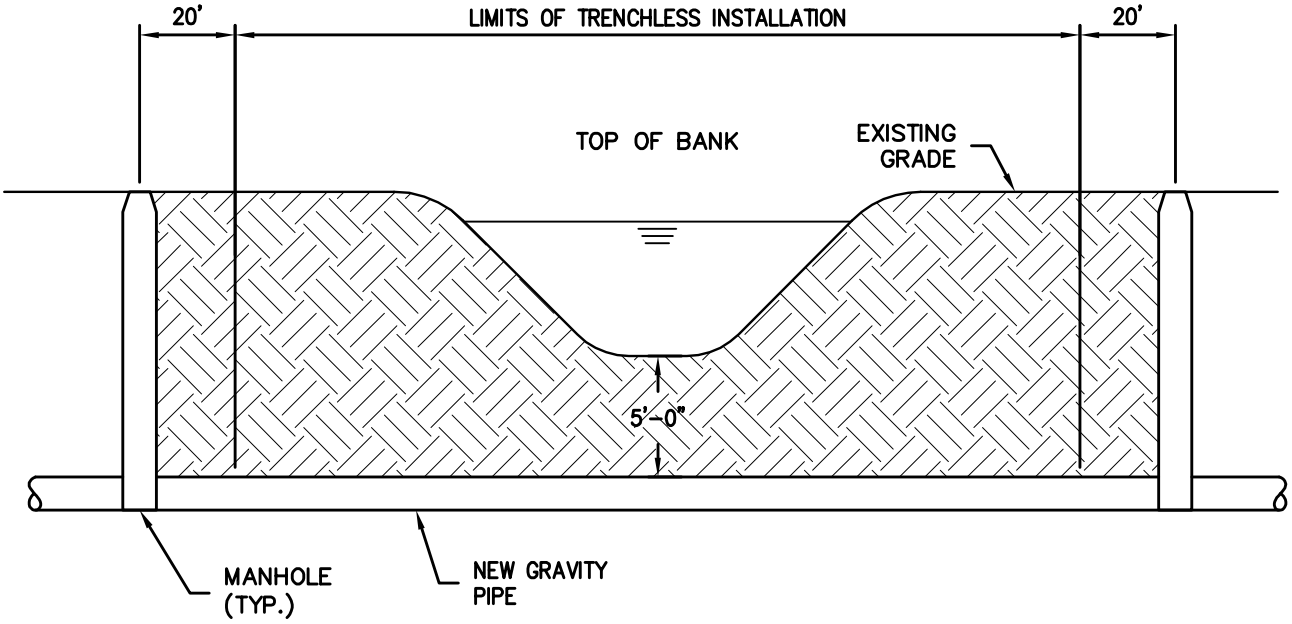

GRAVITY PIPE CROSSING WATERWAY

NO SCALE

DETAIL NO. TL-05
REVISION DATE: MAY 2013

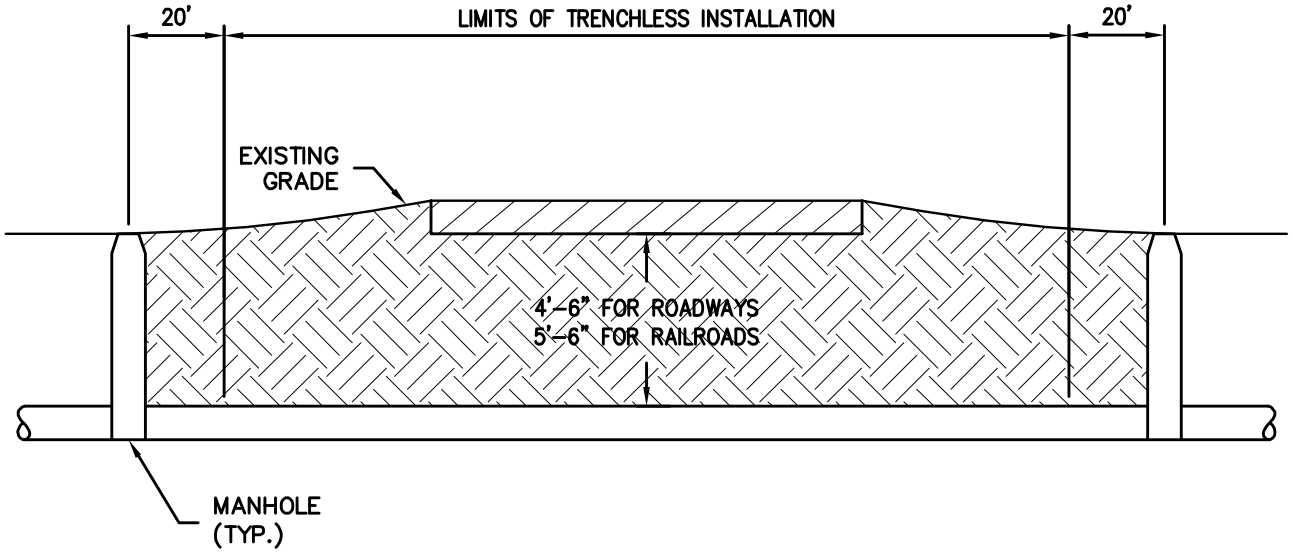

GRAVITY PIPE CROSSING ROADWAY/RAILROAD

NO SCALE

DETAIL NO. TL-06
REVISION DATE: MAY 2013

CONSTRUCTION DETAILS

TR - TRANSPORTATION

TABLE OF CONTENTS

Concrete Chair Back Curb & Gutter TR-01
Concrete Roll Curb & Gutter TR-02
Driveway Curb Cut TR-03
Curb Inlet Detail TR-04
Concrete Center Curb TR-05
Concrete Sidewalk Detail TR-06
Sidewalk ADA Ramp Detail TR-07
Truncated Dome Detail TR-08
Commercial & Industrial Street Pavement & Underdrain Pipe Detail TR-09
Residential Street Pavement & Underdrain Pipe Detail TR-10
Storm Sewer Lateral Connection at Road Underdrain TR-11
Connection to Existing Streets TR-12
Widening Detail TR-13
HMA Pavement Trench Repair Detail TR-14
Minimum Entrance Requirements TR-15
Roadway Improvements at New Development Entrances TR-16
Commercial & Industrial Cul-de-Sac Turnarounds TR-17
Residential Cul-de-Sac Turnarounds Street Class 1 ..... TR-18
Temporary Cul-de-Sac Street Class 1 ..... TR-19
End of Roadway Detail TR-20
Standard Barricade TR-21
Standard Single Lane Roundabout Signage Detail TR-22
Ornamental Lighting Detail TR-23
Curb Painting Requirements TR-24

TOWN OF Brownsburg

MAY 2013

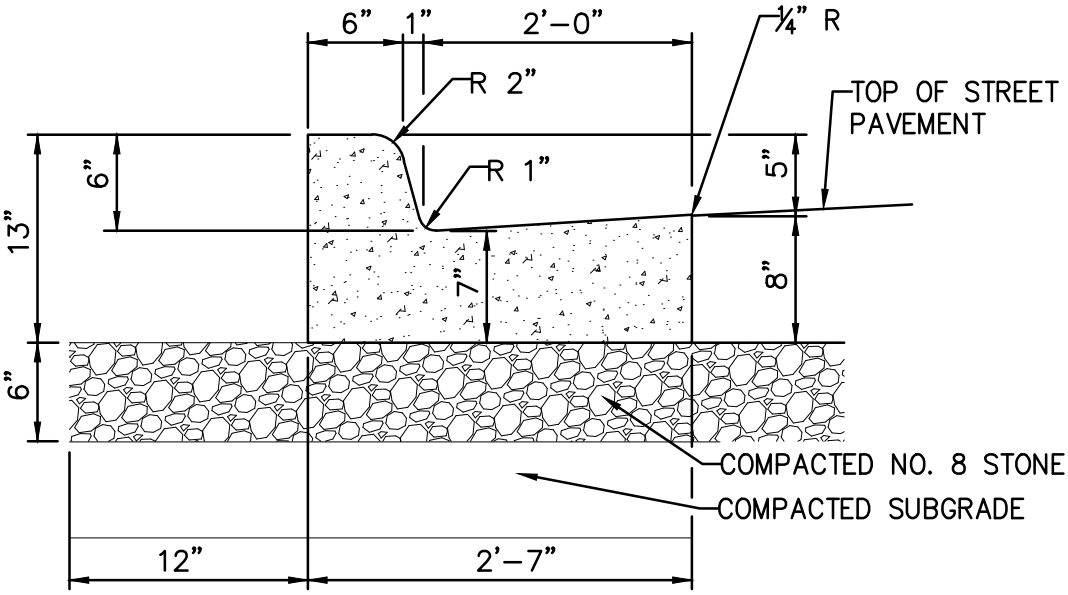

CONCRETE CHAIR BACK CURB & GUTTER

SCALE: NONE

DETAIL NO. TR-01
REVISION DATE: APRIL 2013

Plotted: 4/05/13 @ 5:28pm, DWG: F:\2013\13-2944 Brownsburg Standards Update\CAD Details\13_2944 STANDARD STREETS AND TRANSPORTATION DETAILS.dwg, Layout: TR-01, By: KKendrick

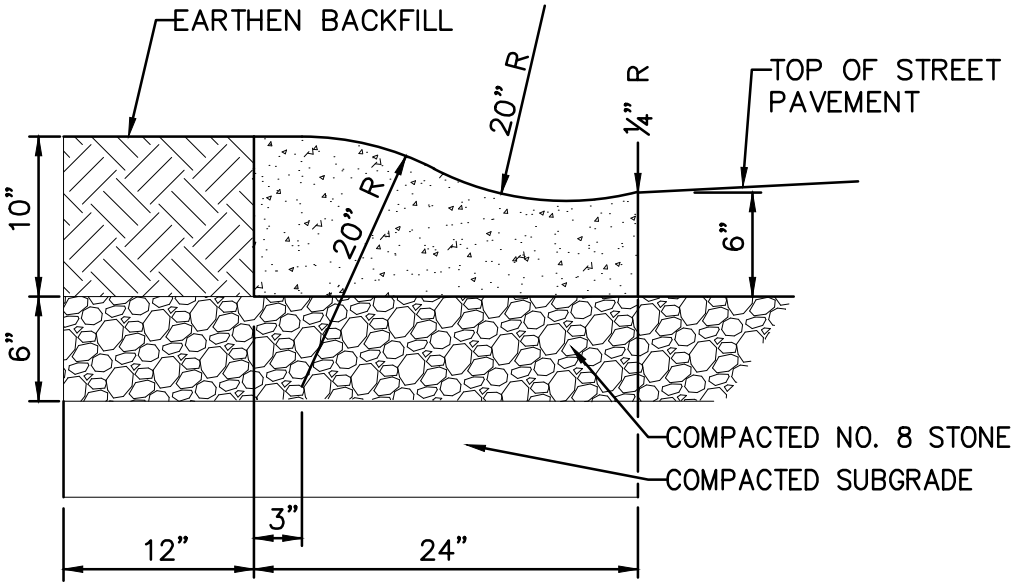

CONCRETE ROLL CURB & GUTTER

SCALE: NONE

DETAIL NO. TR-02
REVISION DATE: APRIL 2013

Plotted: 4/05/13 @ 5:28pm, DWG: F:\2013\13-2944 Brownsburg Standards Update\CAD Details\13_2944 STANDARD STREETS AND TRANSPORTATION DETAILS.dwg, Layout: TR-02, By: KKendrick

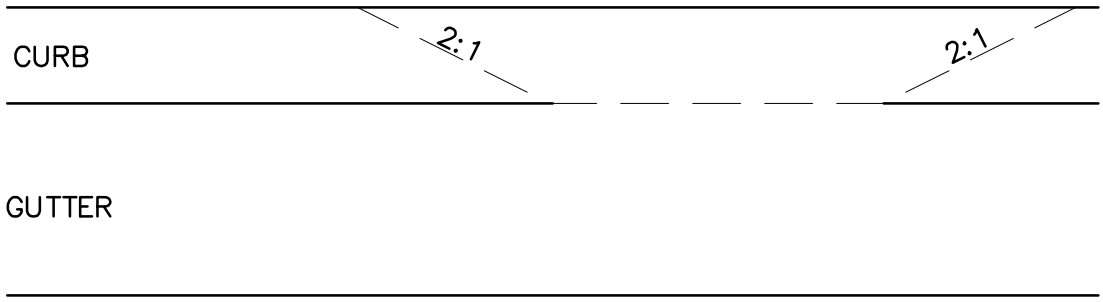

DRIVEWAY CURB CUT

SCALE: NONE

NOTE:

ALL CUTS SHALL BE UNIFORM AND SMOOTH. HORIZONTAL CUT SHALL BE 1/2 INCH UNIFORM HEIGHT ABOVE ADJACENT GUTTER FLOWLINE. TAPERS SHALL BE CUT AT A 2:1 RATIO (HORIZONTAL TO VERTICAL). A 1/2 INCH EXPANSION JOINT IS REQUIRED BETWEEN THE REMAINING CURB AND/OR GUTTER AND THE NEW CONCRETE DRIVE (EXPANSION JOINT NOT REQUIRED FOR HMA DRIVES).

DETAIL NO. TR-03
REVISION DATE: APRIL 2013

Plotted: 4/05/13 @ 5:28pm. DWG: F:\2013\13-2944 Brownsburg Standards Update\CAD Details\13_2944 STANDARD STREETS AND TRANSPORTATION DETAILS.dwg, Layout: TR-03, By: KKendrick

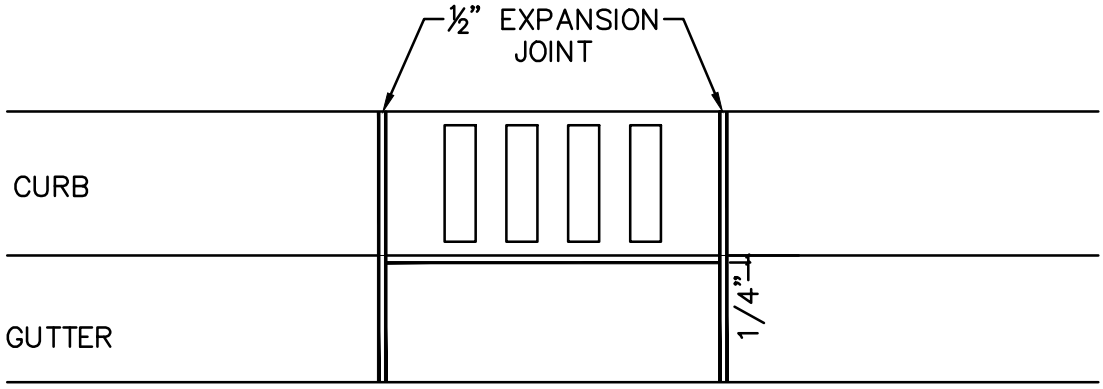

CURB INLET DETAIL

SCALE: NONE

NOTE:

INLET FLOW LINE SHALL BE INSTALLED 1/4 IN. BELOW ADJACENT GUTTER FLOWLINES.

DETAIL NO. TR-04
REVISION DATE: APRIL 2013

Plotted: 4/09/13 @ 11:33am, DWG: F:\2013\13-2944 Brownsburg Standards Update\CAD Details\13_2944 STANDARD STREETS AND TRANSPORTATION DETAILS.dwg, Layout: TR-04, By: JSwick

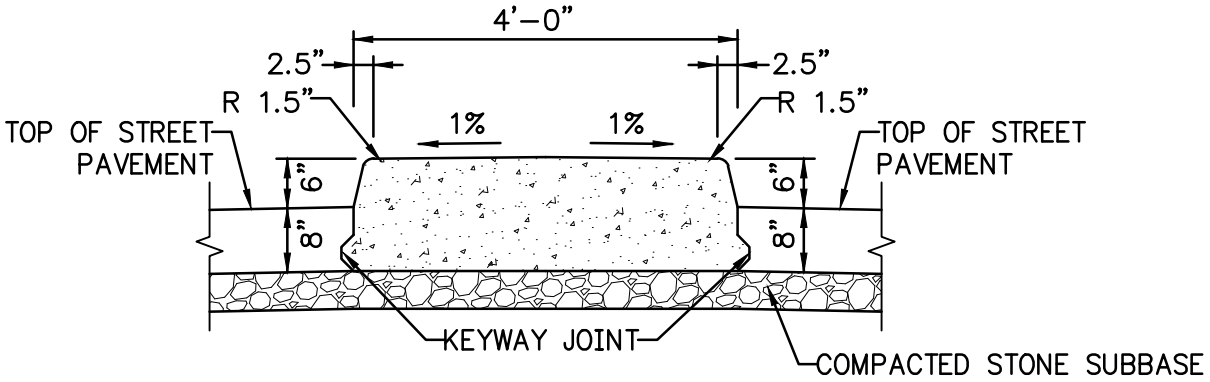

CONCRETE CENTER CURB

SCALE: NONE

DETAIL NO. TR-05
REVISION DATE: APRIL 2013

Plotted: 4/05/13 @ 5:29pm, DWG: F:\2013\13-2944 Brownsburg Standards Update\CAD Details\13_2944 STANDARD STREETS AND TRANSPORTATION DETAILS.dwg, Layout: TR-05, By: KKendrick

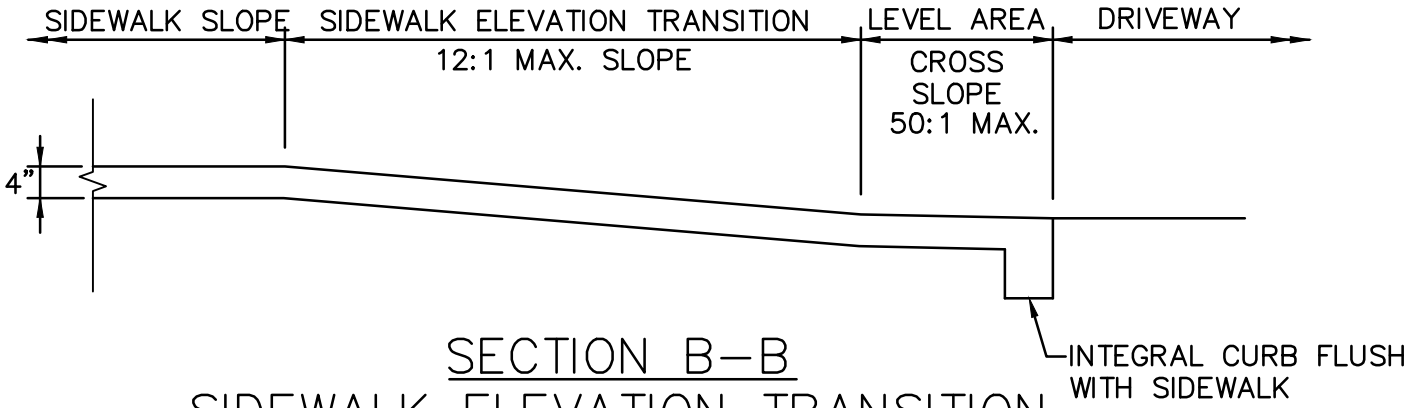

SECTION B–B
SIDEWALK ELEVATION TRANSITION

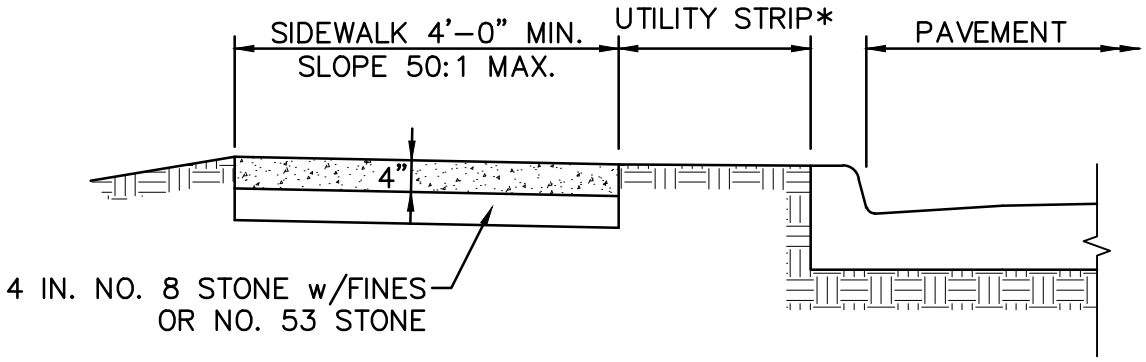

SECTION A–A
SIDEWALK WITH UTILITY STRIP

* UTILITY STRIP WIDTH SHALL COMPLY WITH THE CURRENT TOWN OF BROWNSBURG SUBDIVISION CONTROL ORDINANCE AND CURRENT TOWN OF BROWNSBURG THOROUGHFARE PLAN.

CONCRETE SIDEWALK DETAIL

SCALE: NONE

NOTE:

CONCRETE SIDEWALK SHALL BE INSTALLED ON STABLE SUBGRADE, ESTABLISHED BY PROOF–ROLL. NO. 8 OR NO. 53 STONE SHALL BE INSTALLED AND COMPACTED ON THE APPROVED SUBGRADE. CONCRETE SHALL BE INDOT CLASS A CONCRETE AND IT SHALL HAVE A 28–DAY MINIMUM CONCRETE COMPRESSIVE STRENGTH OF 4,000 PSI. WHERE A SIDEWALK PASSES THROUGH A DRIVE APPROACH, IT SHALL BE THE SAME THICKNESS AS THE ADJACENT CONCRETE DRIVE, THE CONCRETE EQUIVALENT FOR THE ADJACENT HMA DRIVE, OR SIX (6) INCHES, WHICHEVER IS GREATER.

DETAIL NO. TR-06
REVISION DATE: APRIL 2013

Plotted: 4/29/13 @ 1:15pm, DWG: F:\2013\13-2944 Brownsburg Standards Update\CAD Details\13_2944 STANDARD STREETS AND TRANSPORTATION DETAILS.dwg, Layout: TR-06, By: JSwick

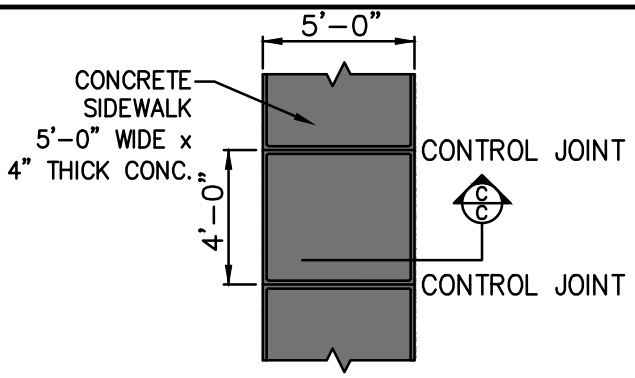

TYPICAL SIDEWALK

SCALE: NONE

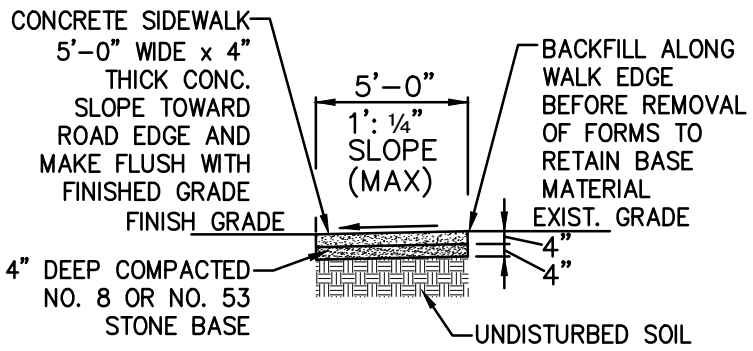

SIDEWALK SECTION C–C

SCALE: NONE

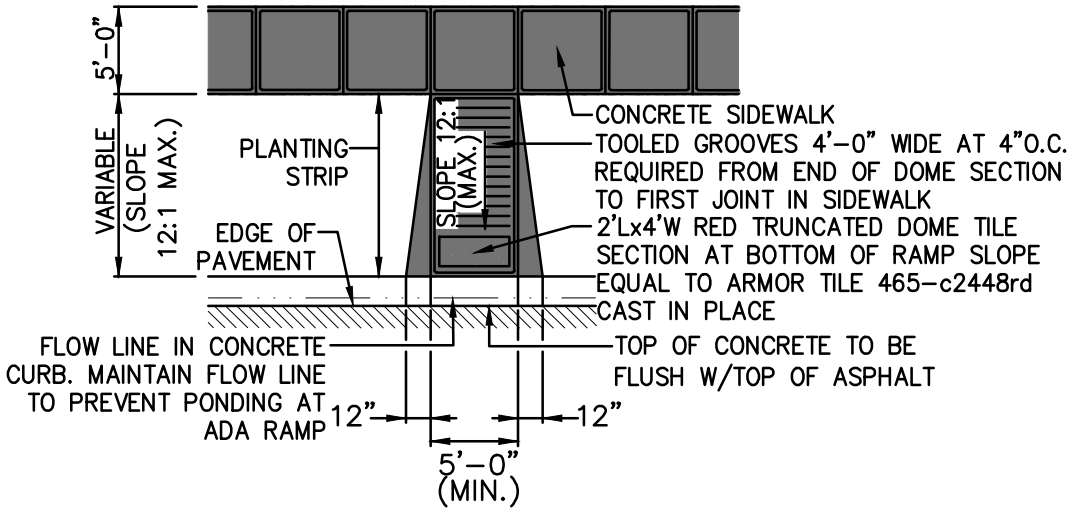

SIDEWALK ADA RAMP DETAIL

NO SCALE

SIDEWALK REQUIREMENTS:

1. CONCRETE FOR SIDEWALKS SHALL MEET THE FOLLOWING SPECIFICATIONS:
   A) 4,000 PSI COMPRESSIVE STRENGTH AT 28 DAYS
   B) 564 LBS. CEMENT PER CUBIC YARD CONCRETE
   C) MAXIMUM WATER CEMENT RATIO: 0.40
   D) AIR CONTENT: 5%–7%
   E) WATER REDUCING ADMIXTURE REQUIRED
2. SIDEWALKS SHALL HAVE A BROOM FINISH WITH TOOLED EDGES AND TOOLED CONTROL JOINTS.
3. CURING COMPOUND EQUAL TO "HYDROCIDE CURING COMPOUND" AS MANUFACTURED BY SONNEBORN, SHALL BE APPLIED TO FINISHED CONCRETE.
4. EXPANSION/CONTRACTION JOINTS SHALL BE INSTALLED AT MAXIMUM OF 20' INTERVALS, AND WHERE CONCRETE WILL ABUT EXISTING WALKS, CURBING, DRIVES, OR OTHER CONCRETE.
5. EXPANSION/CONTRACTION JOINT SHALL BE INSTALLED WITH THREE (3) DIA. SMOOTH DOWEL BARS, EACH 12" LONG. DOWEL BARS SHALL HAVE A FULL END CAP ON ONE END. EXPANSION/CONTRACTION JOINT SHALL BE FILLED WITH EXPANSION JOINT FILLER. CONNECTION TO EXISTING WALKS OR SLABS SHALL REQUIRE DRILLING TO INSTALL DOWELS. EPOXY SHALL BE USED TO SET DOWELS IN EXISTING CONCRETE.
6. AT DRIVEWAYS, CONCRETE SHALL BE REINFORCED WITH 6 x 6 x 6/6 WELDED WIRE FABRIC. REINFORCING WELDED WIRE FABRIC SHALL CONFORM TO ASTM 185–73.
7. SIDEWALK THICKNESS IN DRIVEWAY SHALL MATCH THE EXISTING CONCRETE DRIVEWAY, THE EQUIVALENT CONCRETE THICKNESS OF THE HMA DRIVEWAY OR SIX (6) INCHES, WHICHEVER IS GREATER.
8. REFER TO INDOT STANDARD DRAWINGS E 604–SWCR FOR ADDITIONAL CURB RAMP TYPES AND CONFIGURATIONS.

DETAIL NO. TR-07
REVISION DATE: APRIL 2013

Plotted: 4/09/13 @ 6:13pm. DWG: F:\2013\13-2944 Brownsburg Standards Update\CAD Details\13_2944 STANDARD STREETS AND TRANSPORTATION DETAILS.dwg, Layout: TR-07, By: KKendrick

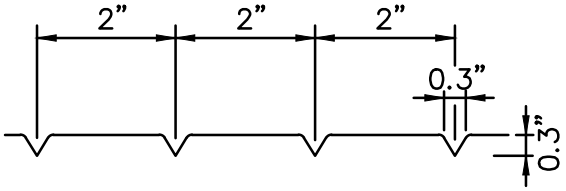

DETAIL OF RAMP GROOVES

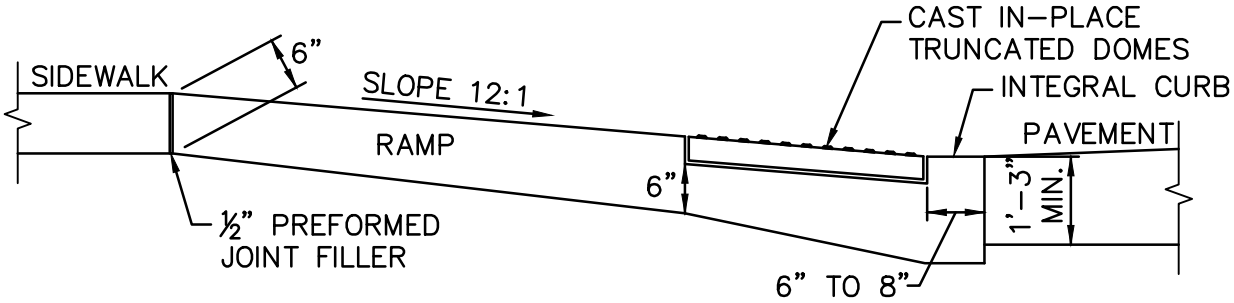

TRUNCATED DOME DETAIL

NO SCALE

NOTE:

THIS DETAIL SHALL BE USED WHEN ACCESSIBLE RAMPS ARE TO BE INSTALLED. TRUNCATED DOMES SHALL MEET APPLICABLE TOWN STANDARDS. WHEN PLACED IN CORNER RADII, MATERIAL SHALL BE CAST IRON DETECTABLE WARNING PLATES, SIMILAR TO NEENAH FOUNDRY PRODUCT, OR APPROVED EQUAL. WHEN PLACED ALONG TANGENT, MATERIAL MAY BE CAST IRON DETECTABLE WARNING PLATES, SIMILAR TO NEENAH FOUNDRY PRODUCT, ARMOR-TILE HERCULITE SERIES, OR APPROVED EQUAL.

DETAIL NO. TR-08
REVISION DATE: APRIL 2013

Plotted: 4/05/13 @ 5:29pm. DWG: F:\2013\13-2944 Brownsburg Standards Update\CAD Details\13_2944 STANDARD STREETS AND TRANSPORTATION DETAILS.dwg, Layout: TR-08, By: KKendrick

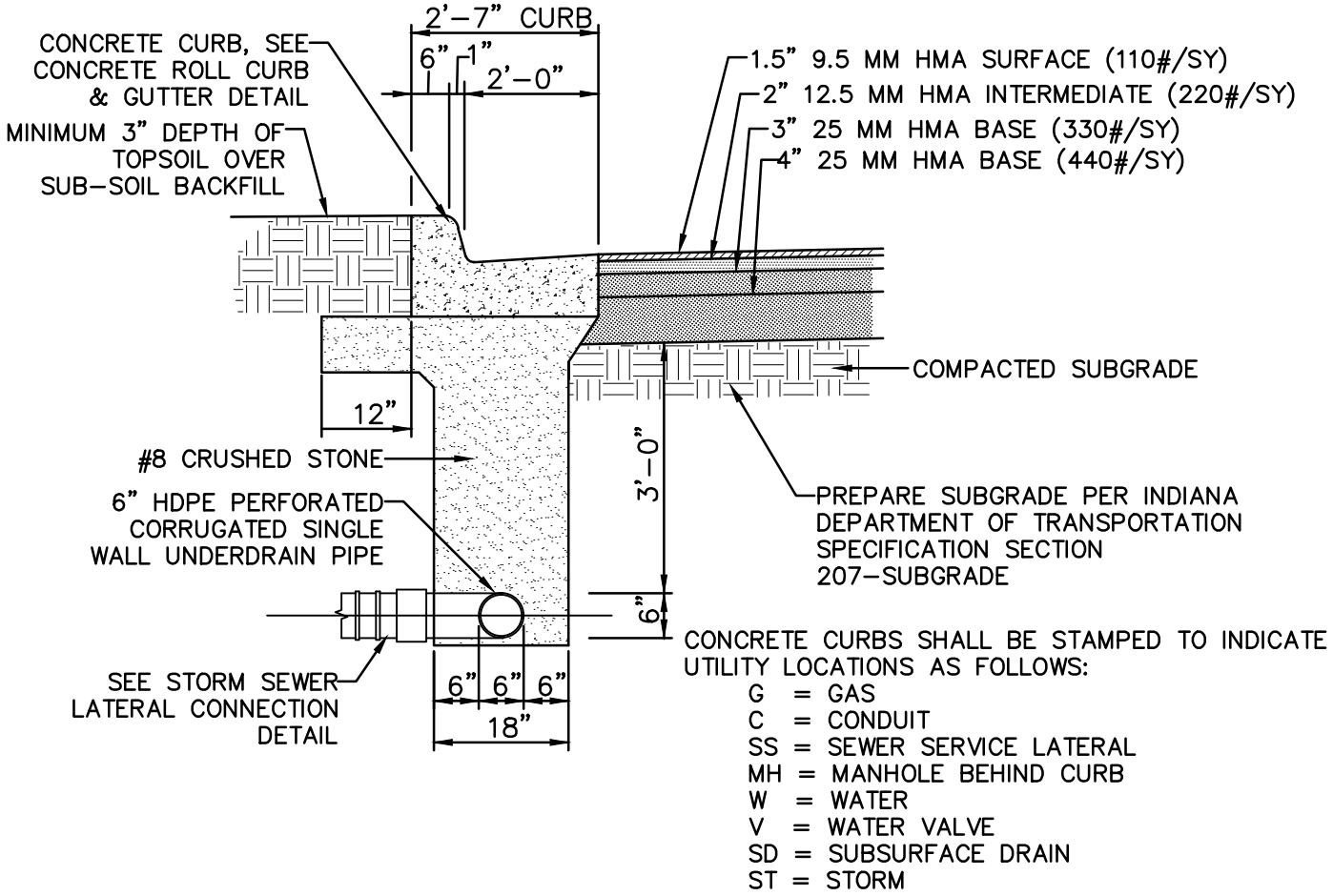

CONCRETE CURBS SHALL BE STAMPED TO INDICATE UTILITY LOCATIONS AS FOLLOWS:

G = GAS
C = CONDUIT
SS = SEWER SERVICE LATERAL
MH = MANHOLE BEHIND CURB
W = WATER
V = WATER VALVE
SD = SUBSURFACE DRAIN
ST = STORM

COMMERCIAL & INDUSTRIAL STREET PAVEMENT & UNDERDRAIN PIPE DETAIL

SCALE: NONE

DETAIL NO. TR-09
REVISION DATE: APRIL 2013

Plotted: 4/09/13 @ 6:13pm, DWG: F:\2013\13-2944 Brownsburg Standards Update\CAD Details\13_2944 STANDARD STREETS AND TRANSPORTATION DETAILS.dwg, Layout: TR-09, By: KKendrick

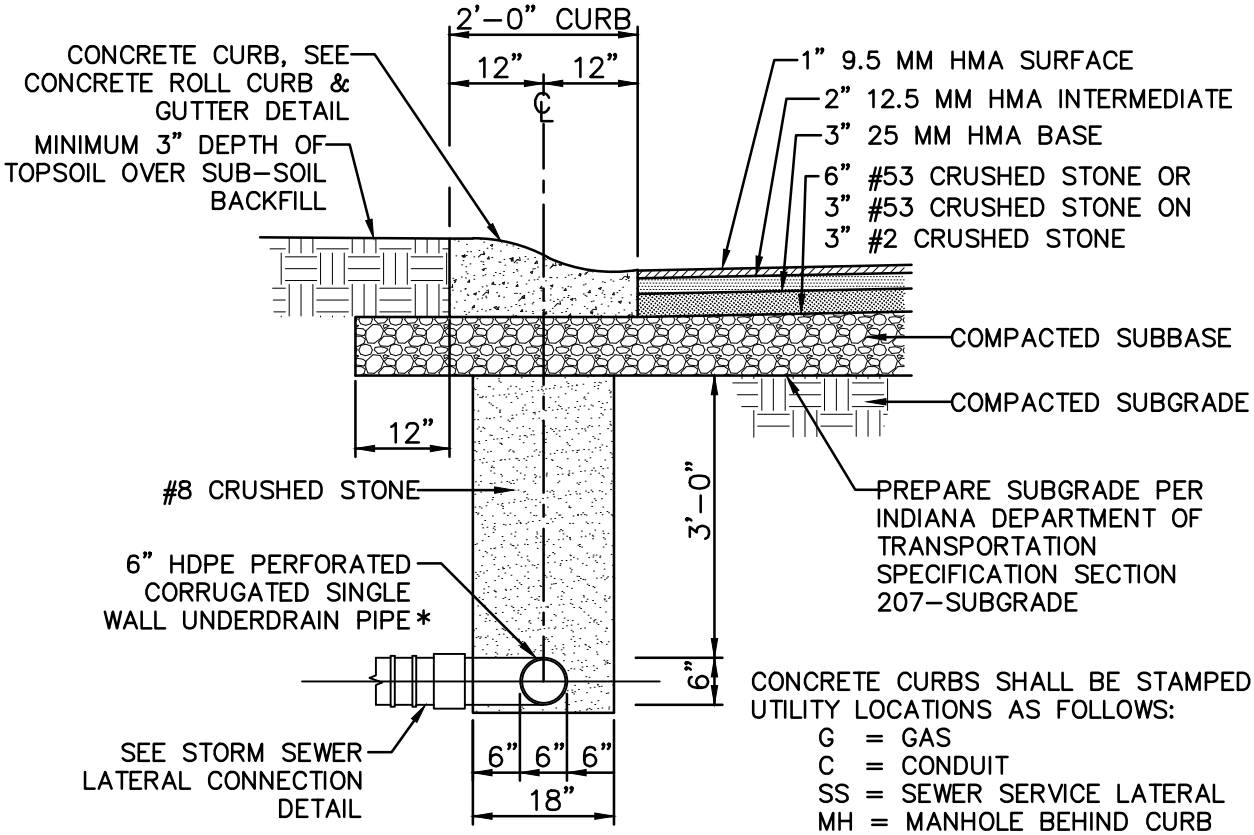

CONCRETE CURBS SHALL BE STAMPED TO INDICATE UTILITY LOCATIONS AS FOLLOWS:

G = GAS
C = CONDUIT
SS = SEWER SERVICE LATERAL
MH = MANHOLE BEHIND CURB
W = WATER
V = WATER VALVE
SD = SUBSURFACE DRAIN
ST = STORM

* UNDERDRAIN CANNOT BE INSTALLED UNTIL AFTER THE ROADWAY SUBGRADE HAS BEEN APPROVED.

RESIDENTIAL STREET PAVEMENT & UNDERDRAIN PIPE DETAIL

SCALE: NONE

DETAIL NO. TR-10
REVISION DATE: APRIL 2013

Plotted: 4/29/13 @ 1:15pm, DWG: F:\2013\13-2944 Brownsburg Standards Update\CAD Details\13_2944 STANDARD STREETS AND TRANSPORTATION DETAILS.dwg, Layout: TR-10, By: JSwick

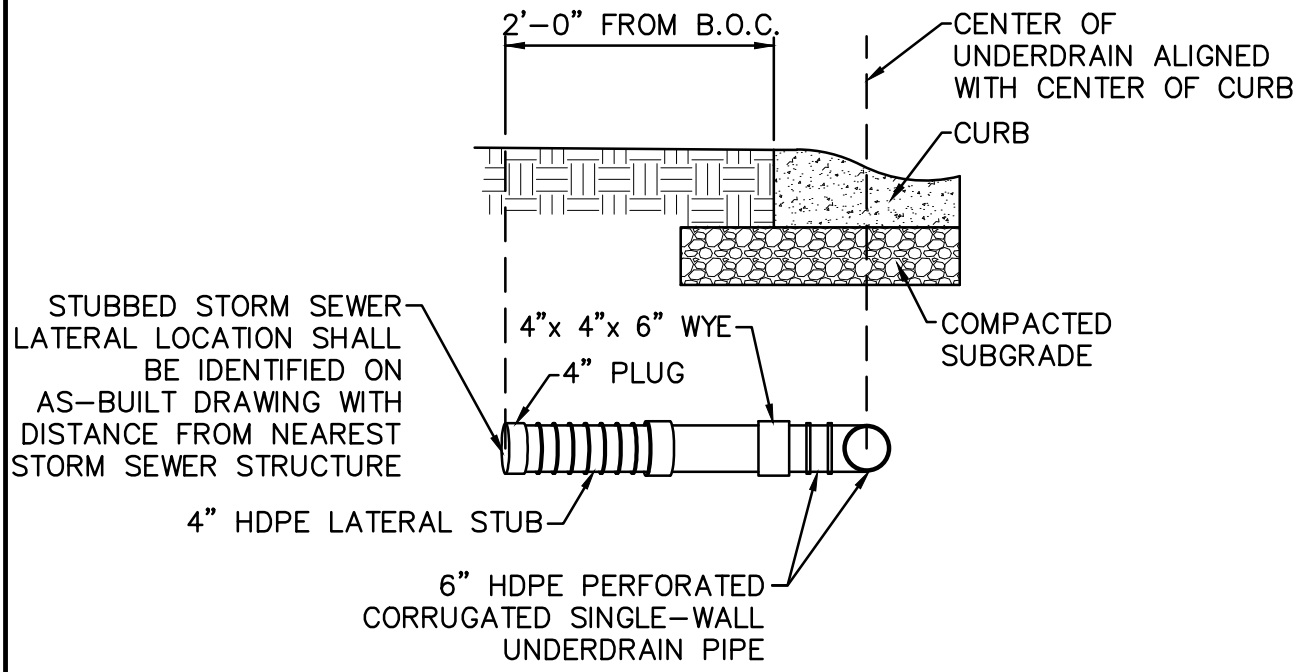

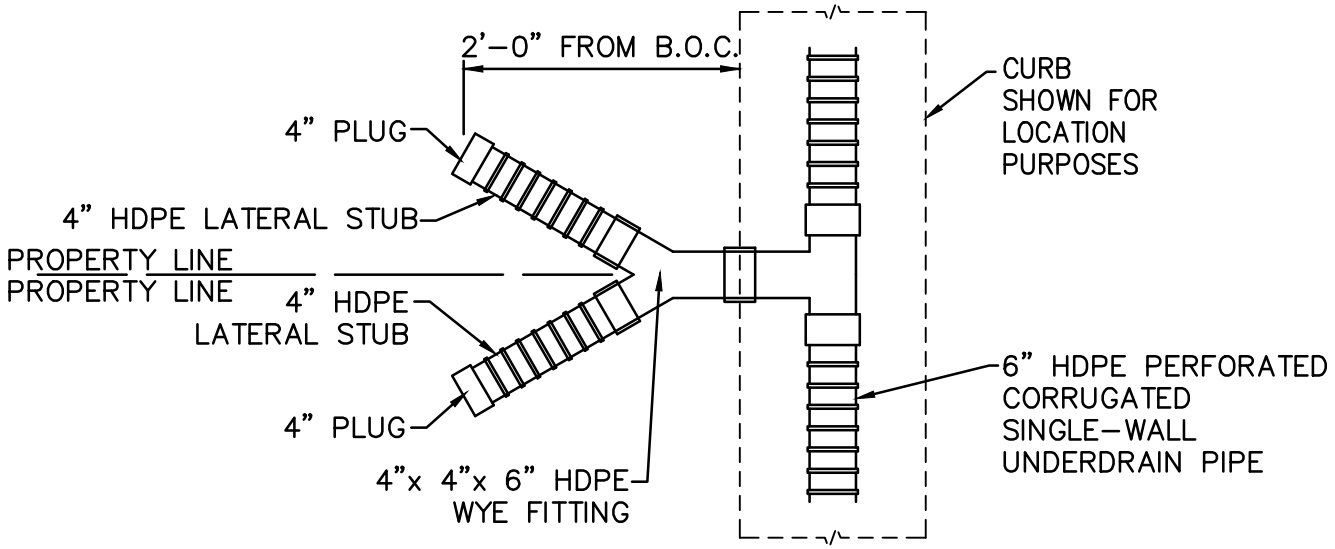

** NOTE: ONLY ALLOWED WHERE REAR YARD DRAIN CONNECTION NOT POSSIBLE **

STORM SEWER LATERAL REQUIREMENTS:

1. ROUTE ALL PROPERTY LATERALS TO REAR YARD STORM SEWERS WHEN POSSIBLE.
2. ALL SUMP PUMP DISCHARGE PIPES SHALL BE CONNECTED TO STORM SEWER SYSTEM. NO "DAY-LIGHTING" OF SUMP PUMP DISCHARGE PIPES ALLOWED.
3. SUMP PUMP DISCHARGE PIPE MUST BE CONNECTED TO LATERAL WITH AN APPROPRIATE FITTING.

STORM SEWER LATERAL CONNECTION AT ROAD UNDERDRAIN

SCALE: NONE

DETAIL NO. TR-11
REVISION DATE: APRIL 2013

Plotted: 4/29/13 @ 1:15pm. DWG: F:\2013\13-2944 Brownsburg Standards Update\CAD Details\13_2944 STANDARD STREETS AND TRANSPORTATION DETAILS.dwg. Layout: TR-11. By: JSwick

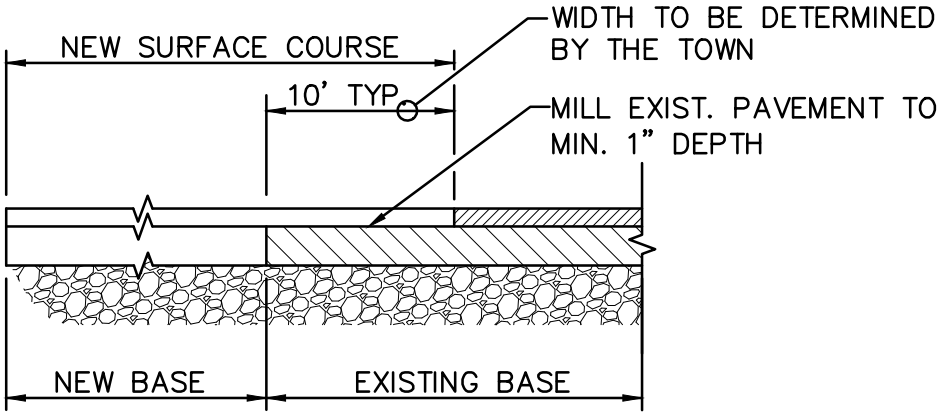

CONNECTION TO EXISTING STREETS

SCALE: NONE

NOTE:

THIS DETAIL SHALL BE USED FOR CONNECTING TO THE END OF AN EXISTING STREET.

EXISTING PAVEMENT SHALL BE SAW CUT, FULL DEPTH, AT A UNIFORM LOCATION INSIDE OF THE EXISTING EDGE OF PAVEMENT, WHERE THE PAVEMENT IS IN GOOD CONDITION AND WILL PROVIDE AN INTERFACE WITH THE FULL PAVEMENT SECTION LINE AND GRADE, FREE FROM LOOSE, DAMAGED, DETERIORATED OR OTHERWISE COMPROMISED MATERIAL; A MINIMUM OF SIX (6) INCHES FROM THE EXISTING EDGE OF PAVEMENT FOR THE FULL WIDTH OF THE EXISTING PAVEMENT; LOCATION OF SAW-CUT TO BE DETERMINED BY THE TOWN OF BROWNSBURG. THE ENTIRE AREA OF THE PROPOSED INTERFACE SHALL BE EXCAVATED TO THE PROPOSED SUBGRADE ELEVATION. THE SUBGRADE SHALL BE STABILIZED IN ACCORDANCE WITH TOWN OF BROWNSBURG STANDARDS AND SPECIFICATIONS. AFTER THE SUBGRADE HAS BEEN STABILIZED AND APPROVED, EXISTING HMA PAVEMENT WILL BE SURFACE MILLED 10 FEET ALONG THE NEW SAW-CUT END OF PAVEMENT TO PROVIDE A WATER STOP AND SMOOTH TRANSITION TO THE NEW PAVEMENT WHEN THE SURFACE MIX IS APPLIED. THE NEW PAVEMENT SECTION SHALL BE INSTALLED IN ACCORDANCE WITH TOWN STANDARDS AND SPECIFICATIONS.

DETAIL NO. TR-12
REVISION DATE: APRIL 2013

Plotted: 4/05/13 @ 5:29pm, DWG: F:\2013\13-2944 Brownsburg Standards Update\CAD Details\13_2944 STANDARD STREETS AND TRANSPORTATION DETAILS.dwg, Layout: TR-12, By: KKendrick

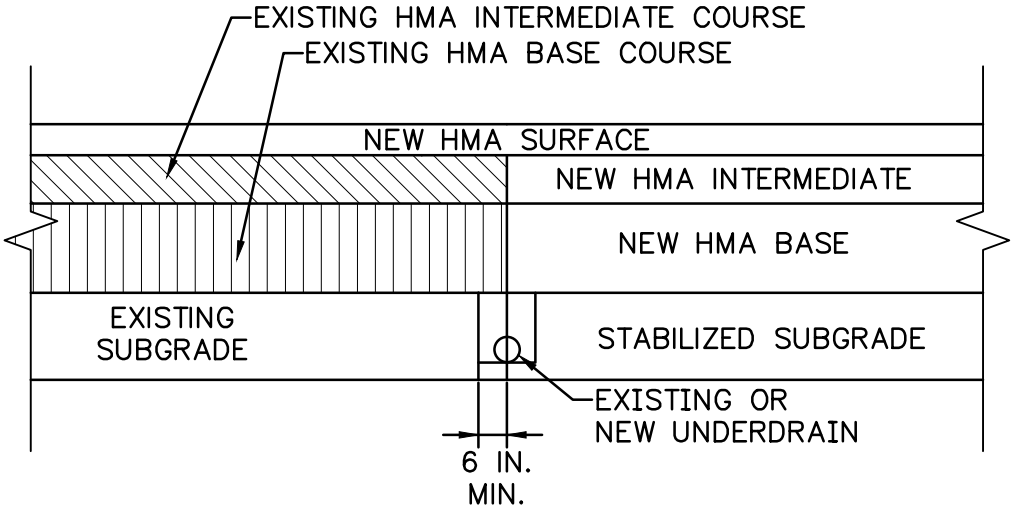

WIDENING DETAIL

SCALE: NONE

NOTE:

THIS DETAIL SHALL BE USED FOR ADDING PAVEMENT ADJACENT TO EXISTING PAVEMENT, INCLUDING WIDENING, ADDING PASSING BLISTERS, ACCELERATION AND DECELERATION LANES, AND FOR NEW ROAD APPROACHES.

EXISTING PAVEMENT SHALL BE SAW CUT, FULL DEPTH, AT A UNIFORM LOCATION ON THE EXISTING PAVEMENT, WHERE THE PAVEMENT IS IN GOOD CONDITION AND WILL PROVIDE AN INTERFACE WITH THE FULL PAVEMENT SECTION LINE AND GRADE, FREE FROM LOOSE, DAMAGED, DETERIORATED OR OTHERWISE COMPROMISED MATERIAL: A MINIMUM OF SIX (6) INCHES FROM EXISTING EDGE OF PAVEMENT FOR THE FULL LENGTH OF THE PROPOSED WIDENING; LOCATION OF SAWCUT TO BE DETERMINED BY THE TOWN OF BROWNSBURG. THE ENTIRE AREA OF THE PROPOSED WIDENING SHALL BE EXCAVATED TO THE PROPOSED SUBGRADE ELEVATION. THE SUBGRADE SHALL BE STABILIZED IN ACCORDANCE WITH TOWN OF BROWNSBURG STANDARDS AND SPECIFICATIONS. AFTER THE SUBGRADE HAS BEEN STABILIZED AND APPROVED, A SIX (6) INCH UNDERDRAIN SHALL BE INSTALLED IN THE SUBGRADE ADJACENT TO THE NEW EDGE OF EXISTING PAVEMENT SECTION, IF ONE DOES NOT ALREADY EXIST. THE NEW UNDERDRAIN SHALL OUTLET INTO AN EXISTING DITCH OR STORM DRAIN, AS APPROVED BY THE TOWN. IF THERE IS AN EXISTING UNDERDRAIN, IT SHALL BE PROTECTED DURING OPERATIONS AND THE STONE FOR THE TRENCH EXTENDED TO THE BOTTOM OF THE NEW PAVEMENT SECTION. EXISTING HMA PAVEMENT WILL BE SURFACE MILLED FROM EDGE OF PAVEMENT TO EDGE OF PAVEMENT (FULL WIDTH) FOR THE ENTIRE LENGTH OF THE WIDENING. WEDGING AS NECESSARY AND SURFACE MIX SHALL BE INSTALLED OVER THE ENTIRE AREA. THE NEW PAVEMENT SECTION SHALL BE INSTALLED IN ACCORDANCE WITH TOWN STANDARDS AND SPECIFICATIONS.

DETAIL NO. TR-13
REVISION DATE: APRIL 2013

Plotted: 4/29/13 @ 1:15pm. DWG: F:\2013\13-2944 Brownsburg Standards Update\CAD Details\13_2944 STANDARD STREETS AND TRANSPORTATION DETAILS.dwg, Layout: TR-13, By: JSwick

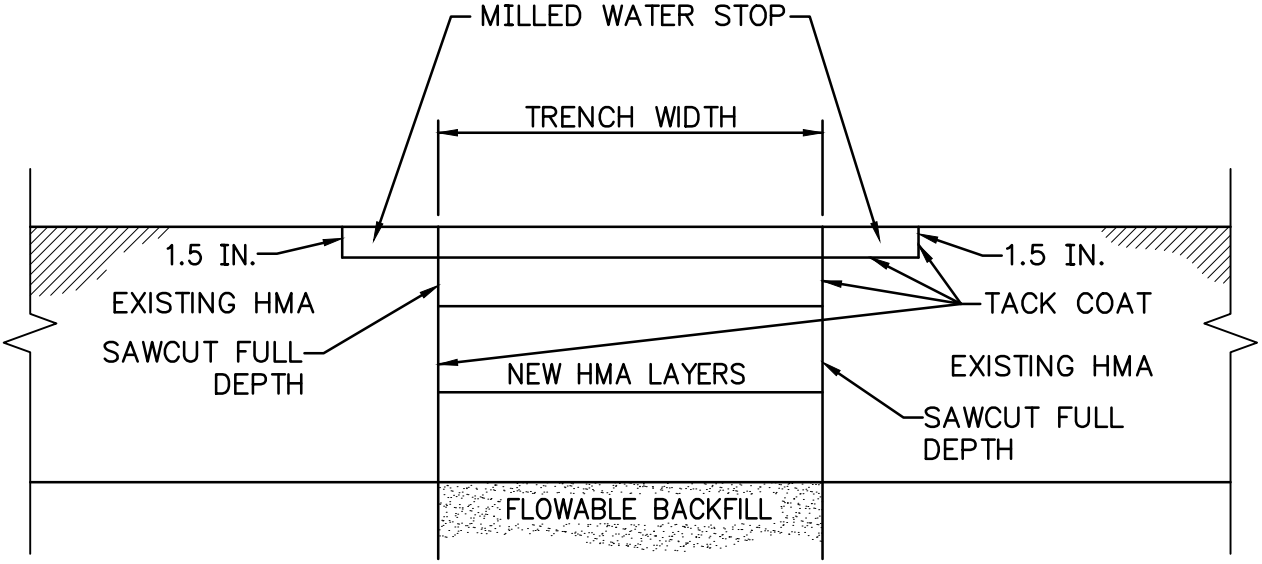

HMA PAVEMENT TRENCH REPAIR DETAIL

SCALE: NONE

NOTE:

TRENCH SHALL BE SAW-CUT FULL DEPTH THROUGH PAVEMENT SECTION FOR THE ENTIRE LENGTH OF THE TRENCH, ON ALL SIDES WITHIN THE PAVEMENT. IF EDGES OF THE EXISTING PAVEMENT ARE CHIPPED OR DAMAGED AS A RESULT OF THE TRENCH PROJECT, GREATER THAN THE 12 INCH MILLING AREA FOR THE WATER STOP, THE DAMAGED PAVEMENT SHALL BE MILLED OR FULL DEPTH SAW-CUT AND REMOVED BEYOND THE DAMAGED EDGE FOR THE ENTIRE LENGTH OF THE TRENCH, TO THE SATISFACTION OF THE TOWN OR THE TOWN'S ENGINEER.

FLOWABLE BACKFILL, PER THE TOWN'S SPECIFICATION, SHALL BE USED TO BACKFILL THE TRENCH TO THE BOTTOM OF THE PAVEMENT SECTION. 12 INCHES ON ALL SIDES OF THE TRENCH SHALL BE SURFACE MILLED 1.5 INCHES DEEP TO CREATE A WATER STOP. ALL SURFACES TO RECEIVE HMA SHALL BE TACK COATED. A PAVEMENT SECTION APPROVED BY THE TOWN SHALL BE INSTALLED TO TOWN STANDARDS AND SPECIFICATIONS.

DETAIL NO. TR-14
REVISION DATE: APRIL 2013

Plotted: 4/05/13 @ 5:29pm, DWG: F:\2013\13-2944 Brownsburg Standards Update\CAD Details\13_2944 STANDARD STREETS AND TRANSPORTATION DETAILS.dwg, Layout: TR-14, By: KKendrick

① PASSING BLISTER MAY BE REQUIRED AT THE DISCRETION OF THE TOWN SUBJECT TO AVAILABLE RIGHT-OF-WAY.

② MINIMUM ENTRANCE RADIUS REQUIREMENTS:
RESIDENTIAL = 40'
COMMERCIAL/INDUSTRIAL = 50'

③ MINIMUM PASSING BLISTER LENGTH REQUIREMENTS:
RESIDENTIAL = 100'
COMMERCIAL/INDUSTRIAL = 150'

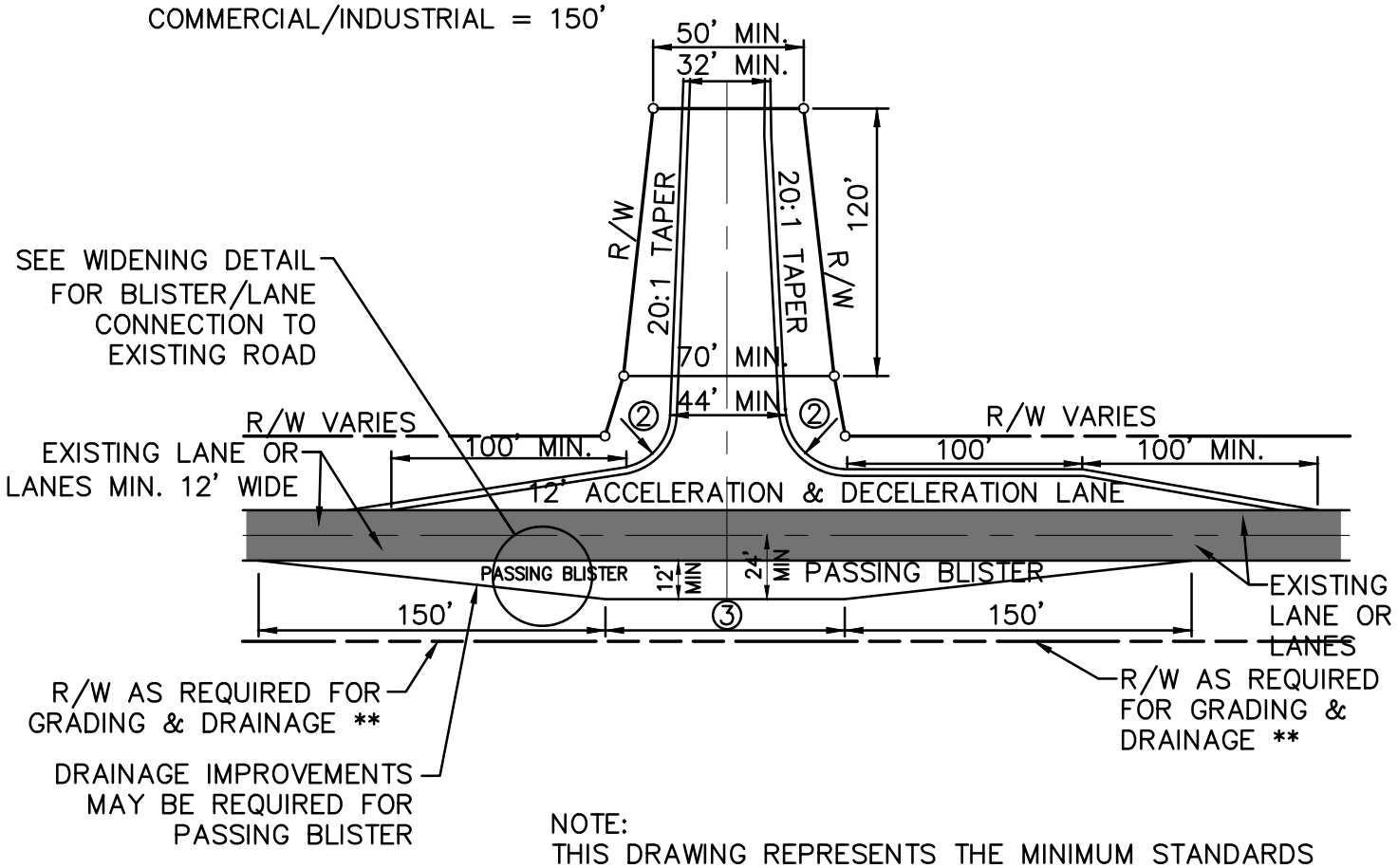

NOTE:
THIS DRAWING REPRESENTS THE MINIMUM STANDARDS FOR AN ENTRANCE. LARGER AND/OR LONGER ACCELERATION AND DECELERATION LANES MAY BE REQUIRED WHEN DEEMED NECESSARY BY THE TOWN OF BROWNSBURG TO ADEQUATELY SERVE THE ANTICIPATED TYPES AND VOLUMES OF TRAFFIC GENERATED BY SPECIFIC DEVELOPMENTS. LENGTH OF ACCELERATION AND DECELERATION LANES MAY BE MODIFIED WHEN WARRANTED AT THE DISCRETION OF THE PLANNING COMMISSION.

** DEVELOPER REQUIRED TO PROVIDE ADEQUATE RIGHT-OF-WAY FOR PASSING BLISTER & NECESSARY DRAINAGE IMPROVEMENTS

MINIMUM ENTRANCE REQUIREMENTS

SCALE: NONE

DETAIL NO. TR-15
REVISION DATE: APRIL 2013

Plotted: 4/05/13 @ 5:29pm, DWG: F:\2013\13-2944 Brownsburg Standards Update\CAD Details\13_2944 STANDARD STREETS AND TRANSPORTATION DETAILS.dwg, Layout: TR-15, By: KKendrick

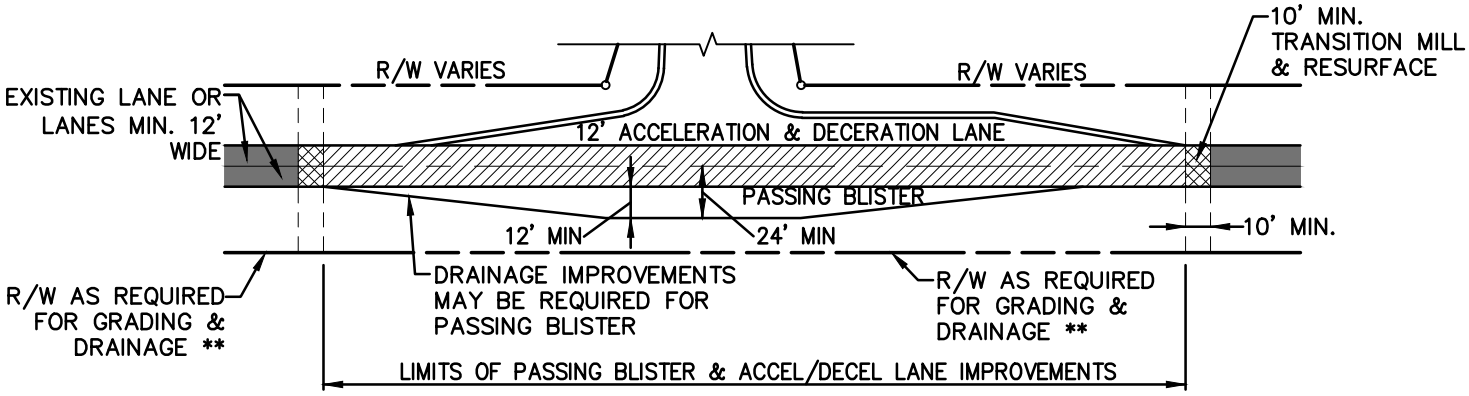

ROADWAY IMPROVEMENT REQUIREMENTS:

THE MAIN ROAD SHALL BE RECONSTRUCTED FOR THE ENTIRE LENGTH OF THE PASSING BLISTER AND ACCEL/DECEL LANE IMPROVEMENTS. SAW CUT EXISTING ASPHALT PAVEMENT AT THE LIMITS OF CONSTRUCTION OF THE ACCEL/DECEL LANES AND PASSING BLISTER. ALL EXISTING ASPHALT PAVEMENT SHALL BE REMOVED THROUGH THE LENGTH OF WIDENING. PREPARE SUBGRADE FOR NEW PASSING BLISTER, ACCELERATION & DECELERATION LANES, AND MAIN ROADWAY ACCORDING TO THE REQUIREMENTS OF THE TOWN OF BROWNSBURG STANDARD DETAILS. ASPHALT PAVING OF THE PASSING BLISTER AND ACCELERATION AND DECELERATION LANES SHALL MEET THE MINIMUM REQUIREMENTS OF THE TOWN OF BROWNSBURG. ASPHALT PAVING OF THE MAIN ROAD LANES SHALL MEET THE MINIMUM REQUIREMENTS OF THE TOWN OF BROWNSBURG FOR ROADWAY PAVING, OR MATCH THE DEPTH OF EXISTING ASPHALT, WHICHEVER IS GREATER. MILL EXISTING ROAD 1" DEEP A MINIMUM OF 10' BEYOND THE ROADWAY REPLACEMENT LIMITS AT EACH END. CONTINUE 1" HMA SURFACE PAVING OVER THE MILLED AREA TO PROVIDE A SMOOTH TRANSITION BETWEEN NEW AND EXISTING ASPHALT PAVEMENT. CURBING SHALL BE EXTENDED THE ENTIRE LENGTH OF THE ACCELERATION AND DECELERATION LANES. IMPROVEMENTS SHALL BE MADE AS NECESSARY TO PROVIDE APPROPRIATE DRAINAGE WHERE THE PASSING BLISTER IS CONSTRUCTED. ADDITIONAL RIGHT OF WAY SHALL BE ACQUIRED AS NECESSARY TO CONSTRUCT PROPER DRAINAGE IMPROVEMENTS AT PASSING BLISTER.

ROADWAY IMPROVEMENTS AT NEW DEVELOPMENT ENTRANCES

SCALE: NONE

DETAIL NO. TR-16
REVISION DATE: APRIL 2013

Plotted: 4/05/13 @ 5:29pm, DWG: F:\2013\13-2944 Brownsburg Standards Update\CAD Details\13_2944 STANDARD STREETS AND TRANSPORTATION DETAILS.dwg, Layout: TR-16, By: KKendrick

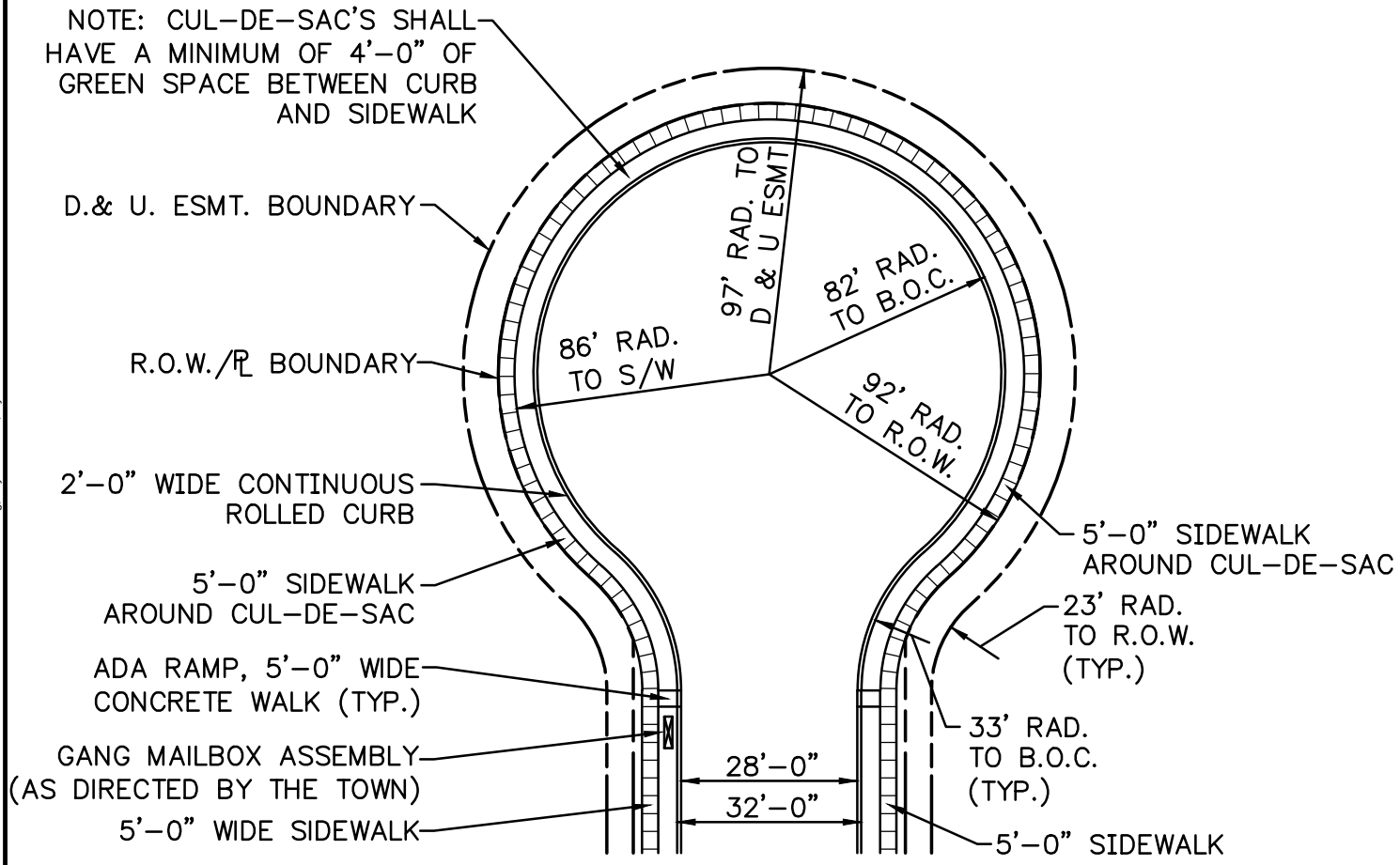

COMMERCIAL & INDUSTRIAL CUL-DE-SAC TURNAROUNDS

SCALE: NONE

DETAIL NO. TR-17
REVISION DATE: MAY 2013

Plotted: 5/10/13 @ 1:17pm, DWG: F:\2013\13-2944 Brownsburg Standards Update\CAD Details\13_2944 STANDARD STREETS AND TRANSPORTATION DETAILS.dwg, Layout: TR-17, By: JSwick

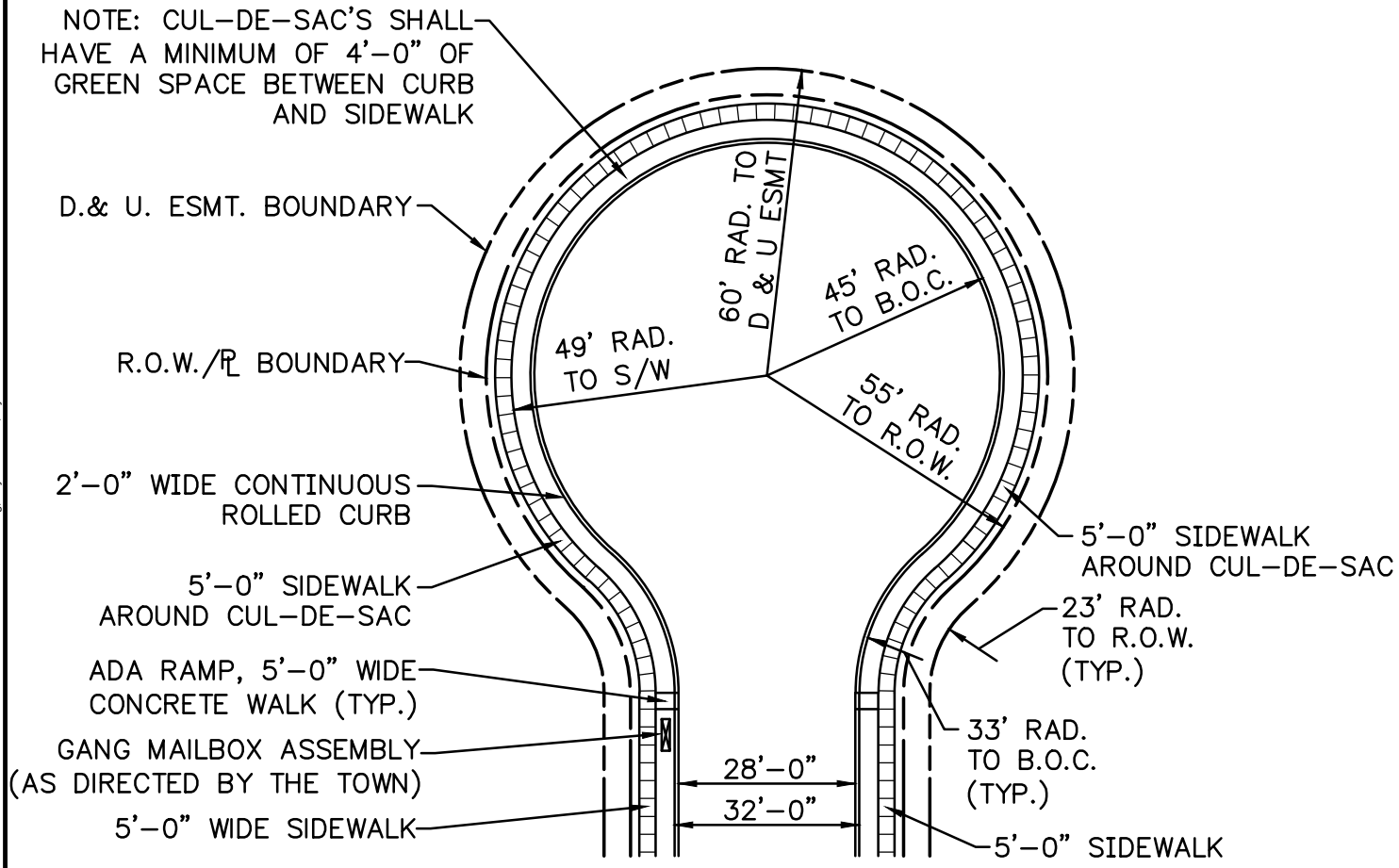

RESIDENTIAL CUL-DE-SAC TURNAROUNDS

STREET CLASS 1

SCALE: NONE

DETAIL NO. TR-18
REVISION DATE: MAY 2013

Plotted: 5/10/13 @ 1:17pm, DWG: F:\2013\13-2944 Brownsburg Standards Update\CAD Details\13_2944 STANDARD STREETS AND TRANSPORTATION DETAILS.dwg, Layout: TR-18, By: JSwick

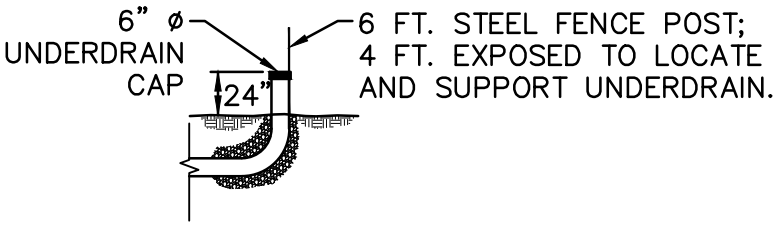

6" ø UNDERDRAIN DETAIL

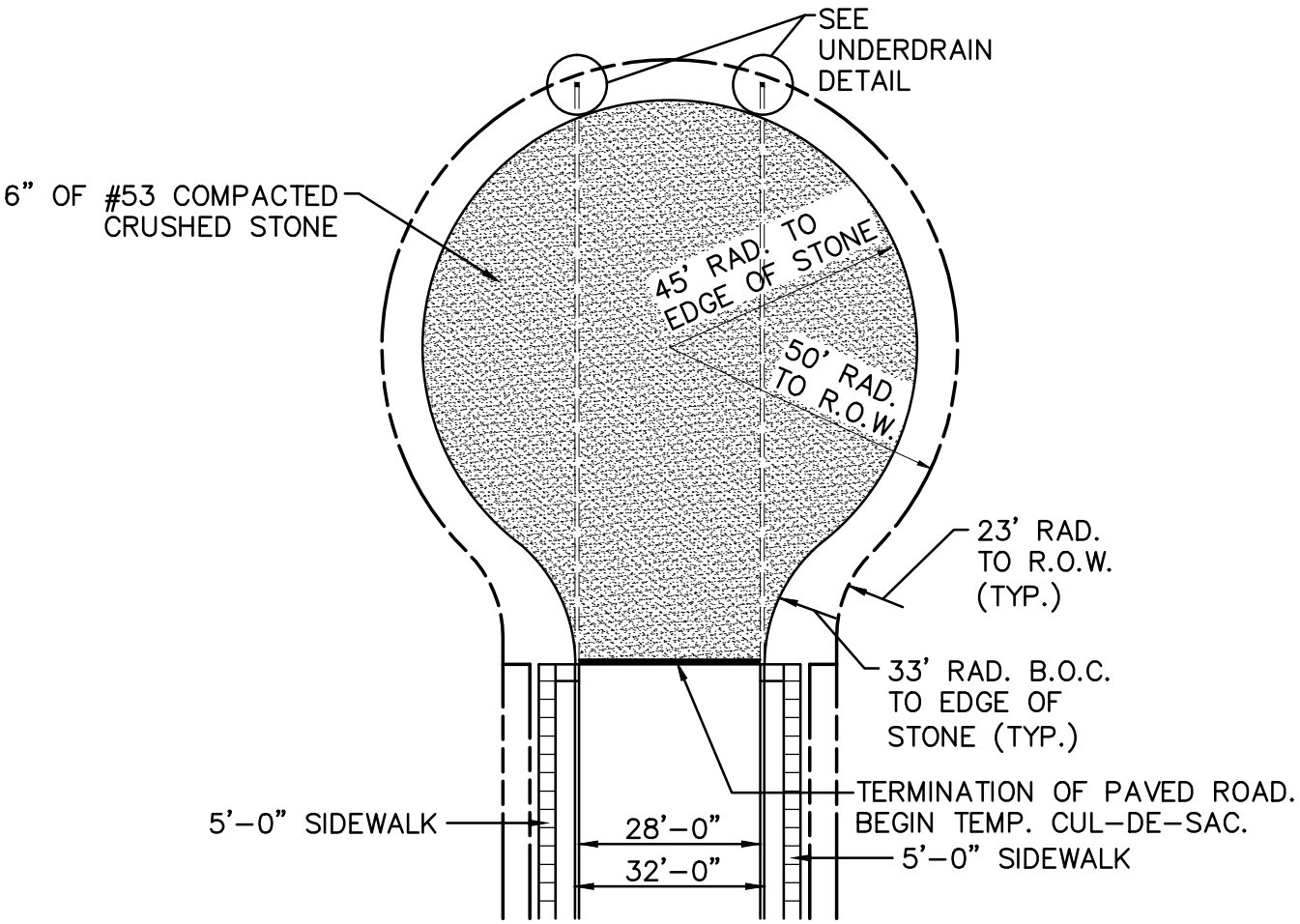

NOTE ON TEMPORARY CUL-DE-SAC'S:

DESIGN AND CONSTRUCTION OF TEMPORARY CUL-DE-SAC'S MUST PROVIDE APPROPRIATE DRAINAGE TO PREVENT PONDING.

TEMPORARY CUL-DE-SAC
STREET CLASS 1

SCALE: NONE

DETAIL NO. TR-19
REVISION DATE: APRIL 2013

Plotted: 4/29/13 @ 1:15pm, DWG: F:\2013\13-2944 Brownsburg Standards Update\CAD Details\13_2944 STANDARD STREETS AND TRANSPORTATION DETAILS.dwg, Layout: TR-19, By: JSwick

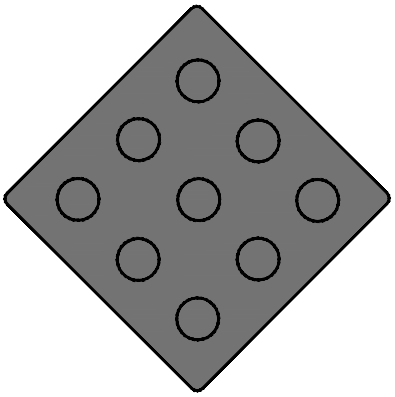

OM4–1

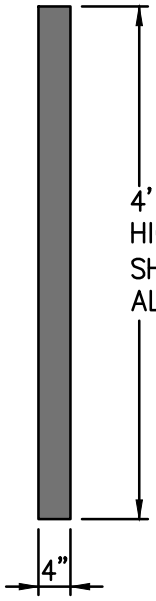

HIGH INTENSITY PRISMATIC RED SHEETING ON 0.080" THICK ALUMINUM SIGN BLANK

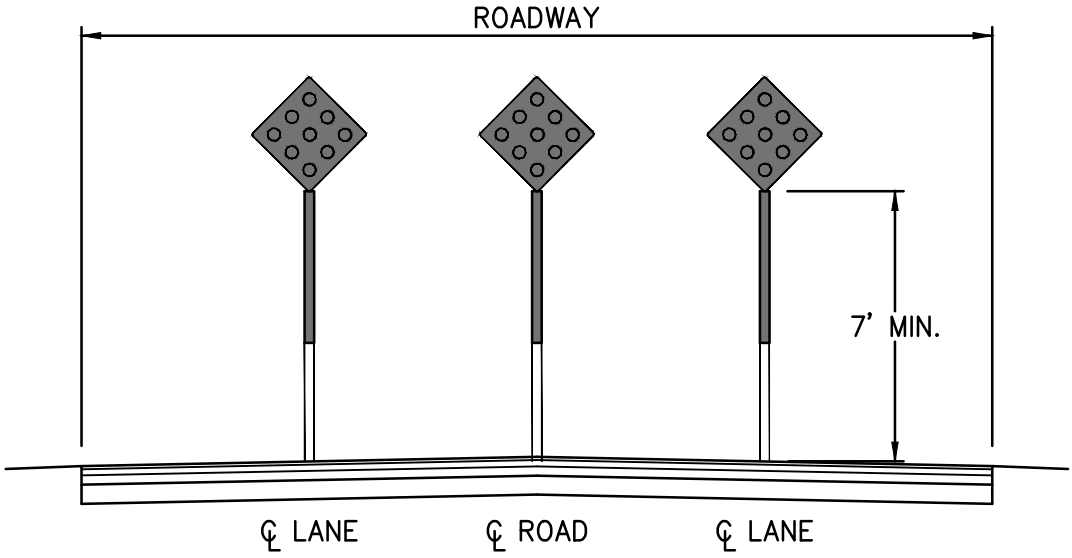

END OF ROADWAY DETAIL

SCALE: NONE

NOTE:

POSTS SHALL BE GALVANIZED 10 GUAGE U–CHANNEL POSTS OR 2 ¼" GALVANIZED SQUARE POSTS, WITH ANCHORS.

DETAIL NO. TR-20
REVISION DATE: APRIL 2013

Plotted: 4/05/13 @ 5:30pm. DWG: F:\2013\13-2944 Brownsburg Standards Update\CAD Details\13_2944 STANDARD STREETS AND TRANSPORTATION DETAILS.dwg, Layout: TR-20, By: KKendrick

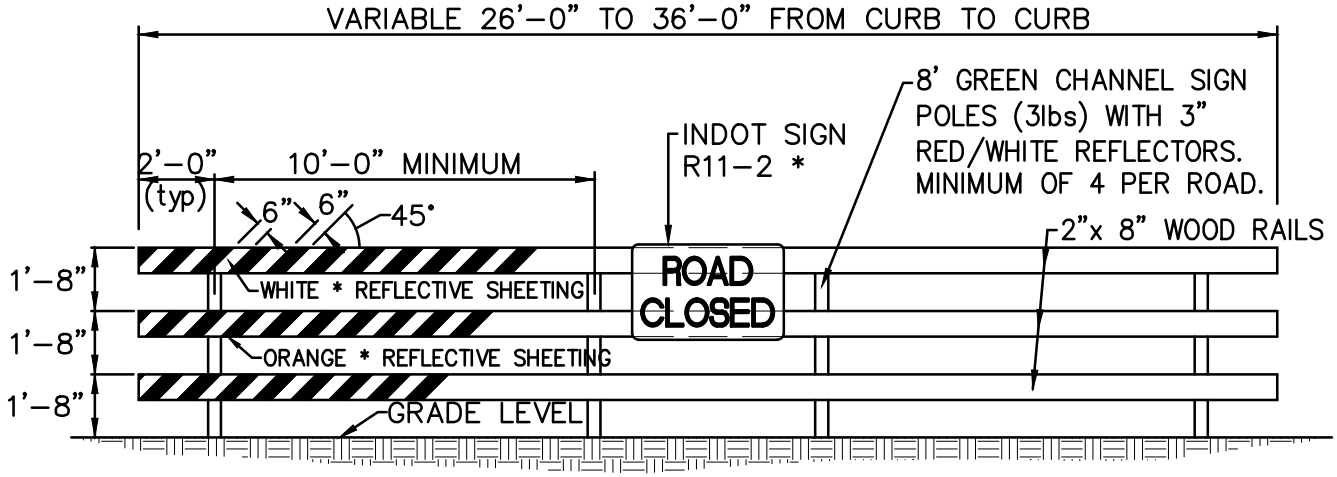

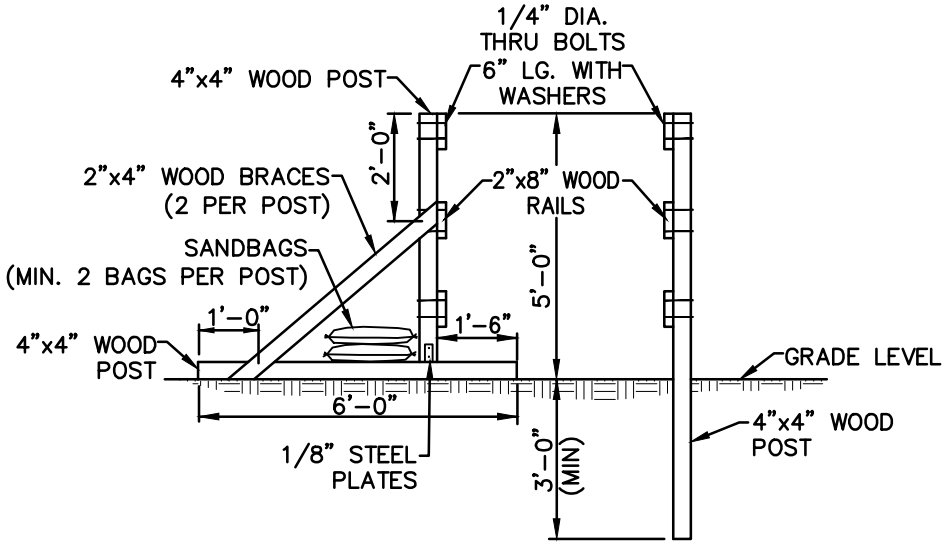

GENERAL NOTES

1. LOCATION OF BARRICADE AS PER PLANS.
2. *REFLECTIVE SHEETING TO BE IN ACCORDANCE WITH INDOT STANDARD SPECIFICATION 912.10.
3. **SEE INDOT STANDARD DETOUR SIGNS DETAILS.
4. REFER TO SECTION 800 OF THE INDIANA DEPARTMENT OF TRANSPORTATION STANDARD SPECIFICATIONS AND LATEST ADDITION OF INDIANA MANUAL OF UNIFORM TRAFFIC CONTROL DEVICES.

STANDARD BARRICADE

SCALE: NONE

DETAIL NO. TR-21
REVISION DATE: APRIL 2013

Plotted: 4/05/13 @ 5:30pm, DWG: F:\2013\13-2944 Brownsburg Standards Update\CAD Details\13_2944 STANDARD STREETS AND TRANSPORTATION DETAILS.dwg, Layout: TR-21, By: KKendrick

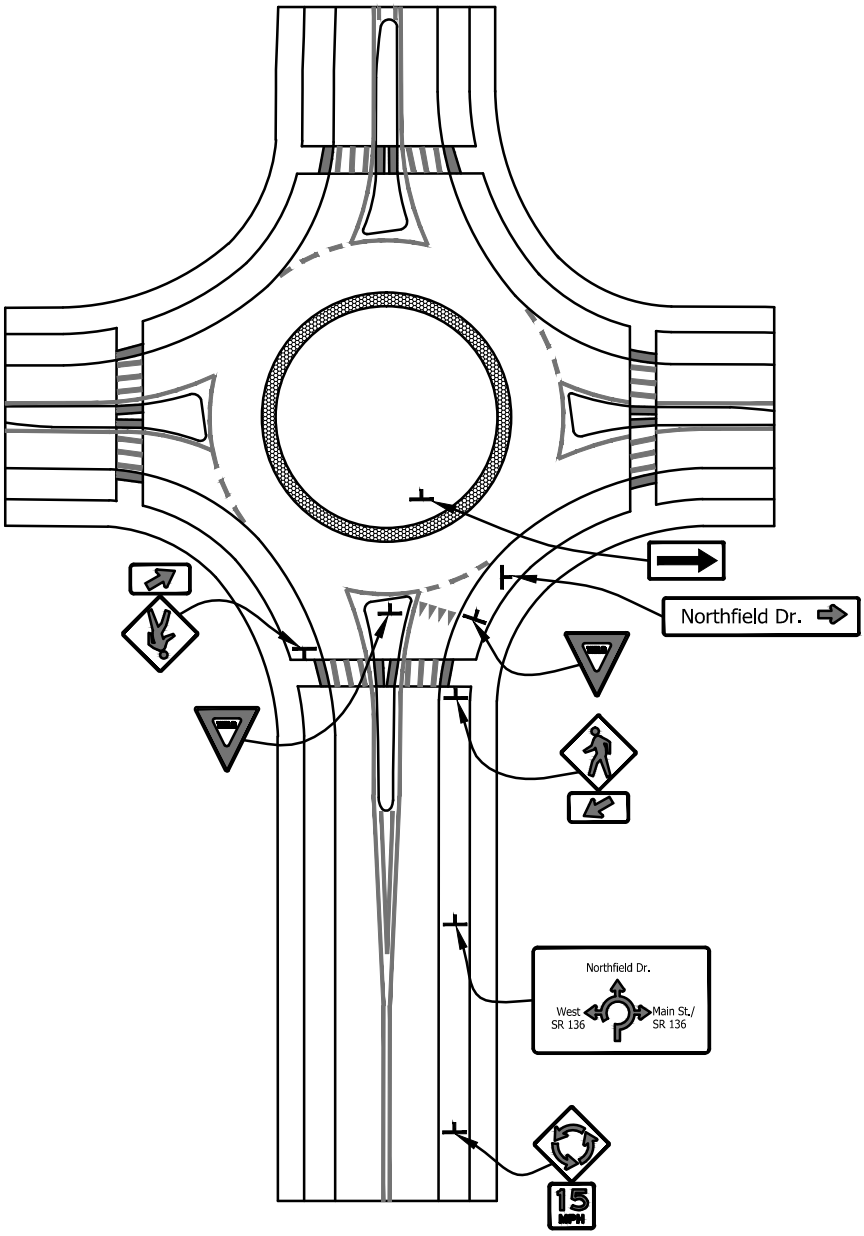

STANDARD SINGLE LANE ROUNDABOUT SIGNAGE DETAIL

SCALE: NONE

NOTE:

1. SIGNS SHOWN FOR ONLY ONE LEG.
2. SEE MANUAL ON UNIFORM TRAFFIC CONTROL DEVICES (MUTCD) PART 2–SIGNS, CHAPTER 2D–GUIDE SIGNS–CONVENTIONAL ROADS, SECTION 2D.38 FOR GUIDE SIGNS AT ROUNDABOUTS.
3. SEE MANUAL ON UNIFORM TRAFFIC CONTROL DEVICES (MUTCD) PART 3–MARKINGS, CHAPTER 3C. ROUNDABOUT MARKINGS FOR MARKINGS AT ROUNDABOUTS.

DETAIL NO. TR-22
REVISION DATE: APRIL 2013

Plotted: 4/05/13 @ 5:30pm. DWG: F:\2013\13-2944 Brownsburg Standards Update\CAD Details\13_2944 STANDARD STREETS AND TRANSPORTATION DETAILS.dwg, Layout: TR-22. By: KKendrick

This drawing is property of Spring City Elect. Mfg. and is issued to the recipient with the understanding that it shall not be copied, duplicated, passed on to unauthorized parties, nor used for any purpose other than that for which it is specifically furnished except with Spring City's written permission.

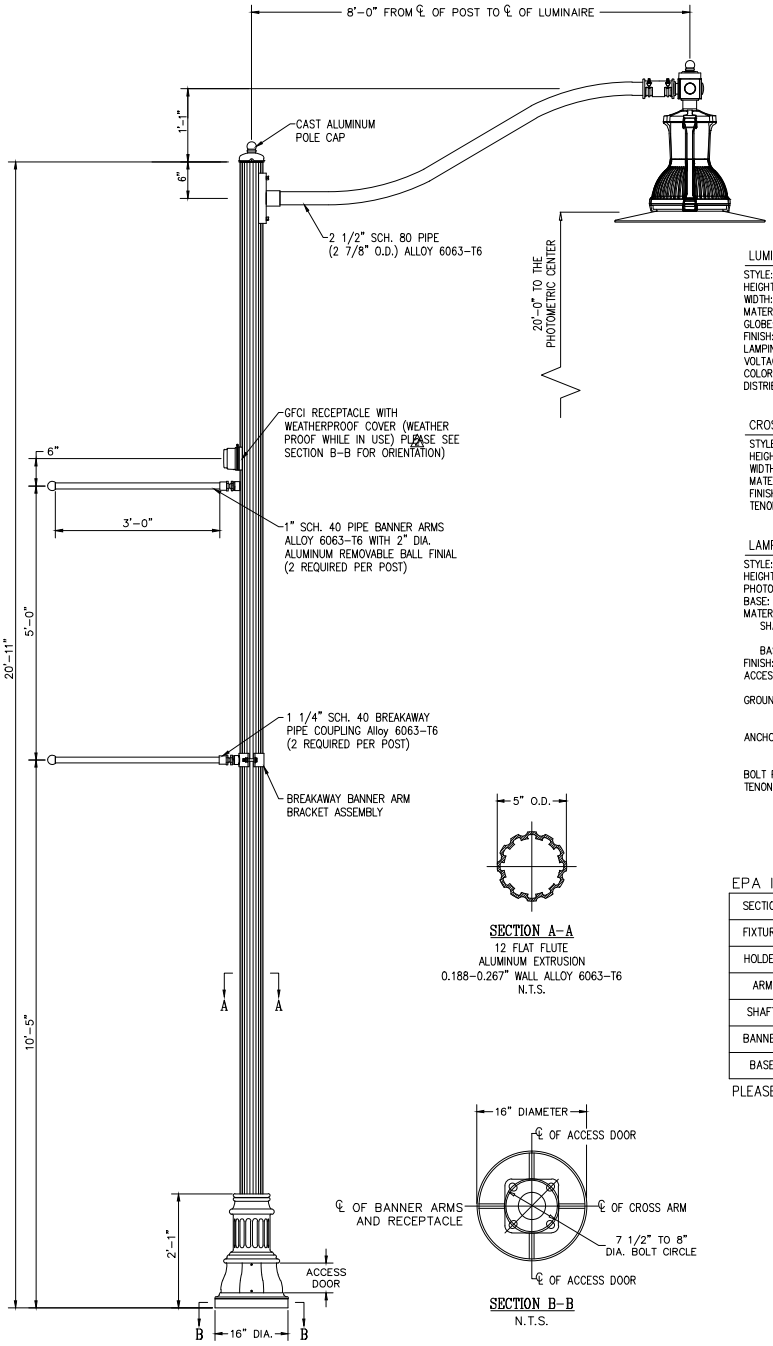

SECTION A-A
12 FLAT FLUTE
ALUMINUM EXTRUSION
0.188-0.267" WALL ALLOY 6063-T6
N.T.S.

SECTION B-B
N.T.S.

LUMINAIRE SPECIFICATIONS

STYLE:	COLUMBIA LED (WITH SPUN ALUMINUM SHADE)
HEIGHT:	2'-5"
WIDTH:	33" DIAMETER
MATERIAL:	CAST AND SPUN ALUMINUM
GLOBE:	TEMPERED FLAT GLASS
FINISH:	FINISH COATED - TEXTURED BLACK
LAMPING:	160 WATT (± 3%) LED SYSTEM
VOLTAGE:	120 - 277 VOLT
COLOR TEMPERATURE:	4500K
DISTRIBUTION::	TYPE III (ASYMMETRIC) DISTRIBUTION

CROSS ARM SPECIFICATIONS

STYLE:	DAVIT
HEIGHT:	2'-0"
WIDTH:	8'-0" FROM ℄ OF POST TO ℄ OF LUMINAIRE
MATERIAL:	CAST ALUMINUM ORNAMENTATION WITH ALUMINUM PIPE
FINISH:	FINISH COATED - TEXTURED BLACK
TENON:	WELDED CONNECTION

LAMP POST SPECIFICATIONS

STYLE:	WELESLEY
HEIGHT:	20'-11"
PHOTOMETRIC CENTER:	20'-0"
BASE:	16" DIAMETER
MATERIAL:	
SHAFT:	0.188-0.267" WALL, 12 FLAT FLUTE ALUMINUM EXTRUSION, ALLOY 356-T6
BASE:	CAST ALUMINUM, ALLOY 356-T6
FINISH:	FINISH COATED - TEXTURED BLACK
ACCESS DOOR:	(2) LOCATED IN BASE SECURED WITH TAMPER PROOF HEX SOCKET SECURITY MACHINE SCREWS
GROUND STUD PROVISIONS:	DRILL AND TAP INSIDE WALL OF BASE OPPOSITE ACCESS DOOR TO ACCOMMODATE A 1/4"-20 GROUND STUD (STUD BY OTHERS)
ANCHOR BOLTS:	(4) 3/4" DIA X 17" LONG + 3" HOOK (FULLY GALVANIZED WITH 1 GALVANIZED NUT AND 1 GALVANIZED WASHER PER BOLT)
BOLT PROJECTION:	2" REQUIRED
TENON:	DECORATIVE FLUTED 3"

EPA INFORMATION

SECTION	PROJ. AREA	Cd	E.P.A.	Y - CENTROID	X - CENTROID
FIXTURE	2.22 Sq. Ft.	0.5	1.11 Sq. Ft.	18.64 Ft.	8.0 Ft.
HOLDER	0.49 Sq. Ft.	1.25	0.61 Sq. Ft.	20.23 Ft.	7.75 Ft.
ARM	1.82 Sq. Ft.	0.5	0.91 Sq. Ft.	19.09 Ft.	3.61 Ft.
SHAFT	6.67 Sq. Ft.	0.5	3.34 Sq. Ft.	10.72 Ft.	0 Ft.
BANNER	15.33 Sq. Ft.	1.20	18.40 Sq. Ft.	12.5 Ft.	-1.77 Ft.
BASE	1.81 Sq. Ft.	0.5	0.81 Sq. Ft.	0.90 Ft.	0 Ft.

PLEASE NOTE: DRAG COEFFICIENT BASED ON 90 MPH WIND

Spring City Electrical Mfg. Co.
HALL AND MAIN STREETS - P.O. BOX 19 - SPRING CITY, PA. 19475
PHONE (610) 948-4000 - FAX (610) 948-5577 - WWW.SPRINGCITY.COM

DESCRIPTION	THE MOUNT VIEW (MODIFIED) 20'-11" LAMP POST WITH THE DAVIT SINGLE CROSS ARM AND THE COLUMBIA (LED) LUMINAIRE		
CUSTOMER / JOB	BROWNSBURG, IN		
SCALE	DRAWN BY:	DATE	DRAWING NO.
N.T.S.	B.K.R.	06-11-10	LP-27893

ORNAMENTAL LIGHTING DETAIL

SCALE: NONE

DETAIL NO. TR-23
REVISION DATE: APRIL 2013

Plotted: 4/05/13 @ 5:30pm, DWG: F:\2013\13-2944 Brownsburg Standards Update\CAD Details\13_2944 STANDARD STREETS AND TRANSPORTATION DETAILS.dwg, Layout: TR-23, By: KKendrick

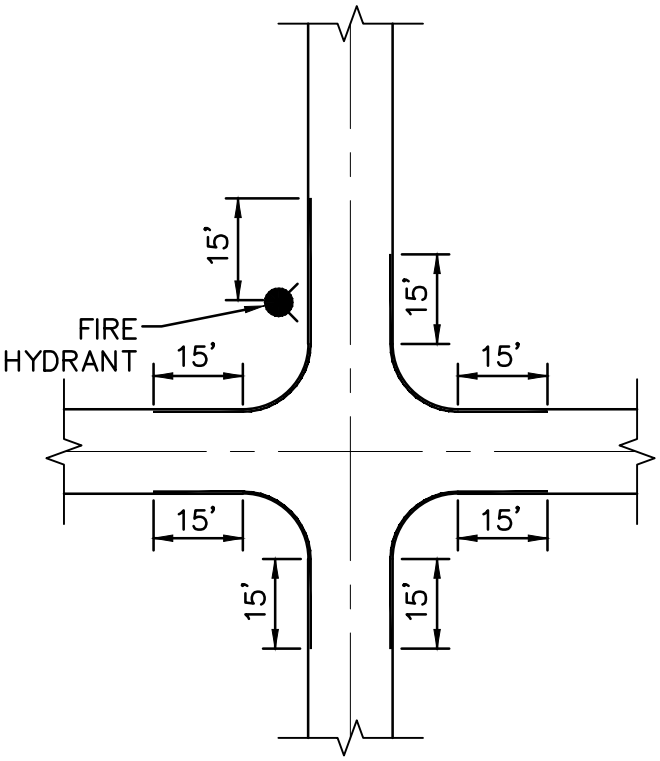

NOTE:
CURB SHALL BE PAINTED WITH INDOT APPROVED YELLOW TRAFFIC PAINT. PAINT IS TO BE IMMEDIATELY REFLECTORIZED BY APPLYING GLASS BEADS TO THE FRESH PAINT, UNIFORMLY AT THE INDOT SPECIFIED RATE. ALL CURB RADII SHALL BE PAINTED. PAINTING SHALL EXTEND TO A POINT FIFTEEN FEET (MINIMUM) FROM THE RADIUS TANGENT. GREATER THAN FIFTEEN FEET FROM THE RADIUS TANGENT MAY BE REQUIRED BY INTERSECTION SIGHT DISTANCE CALCULATIONS. IF A FIRE HYDRANT IS LOCATED WITHIN FIFTEEN FEET OF THE CURB TO BE PAINTED, PAINTING SHALL CONTINUE TO A POINT FIFTEEN FEET BEYOND THE FIRE HYDRANT.

CURB PAINTING REQUIREMENTS

SCALE: NONE

DETAIL NO. TR-24
REVISION DATE: MAY 2013

Plotted: 5/10/13 @ 1:17pm, DWG:F:\2013\13-2944 Brownsburg Standards Update\CAD Details\13_2944 STANDARD STREETS AND TRANSPORTATION DETAILS.dwg, Layout: TR-24, By: JSwick

CONSTRUCTION DETAILS

RS - ROADWAY SECTIONS

TABLE OF CONTENTS

Typical Cross Sections – Primary Arterials A1 and A2 ..... RS-01
Typical Cross Sections – Primary Arterials B1 and B2 ..... RS-02
Typical Cross Sections – Primary Arterials C1 and C2 ..... RS-03
Typical Cross Sections – Secondary Arterials 1 and 2 ..... RS-04
Typical Cross Sections – Collectors 1 and 2 ..... RS-05
Typical Cross Sections – Neighborhood Collectors 1 and 2 ..... RS-06
Typical Cross Sections – Local 1 (No Parking), Local 2 (Parking Both Sides) and Local 3 (Parking One Side) RS-07
Typical Trail Cross Section RS-08

TOWN OF Brownsburg

MAY 2013

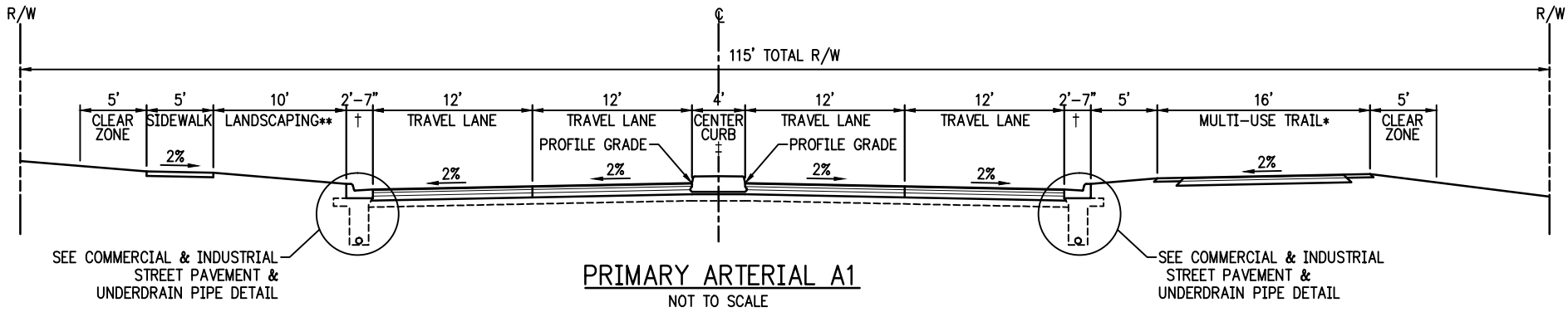

PRIMARY ARTERIAL A1

NOT TO SCALE

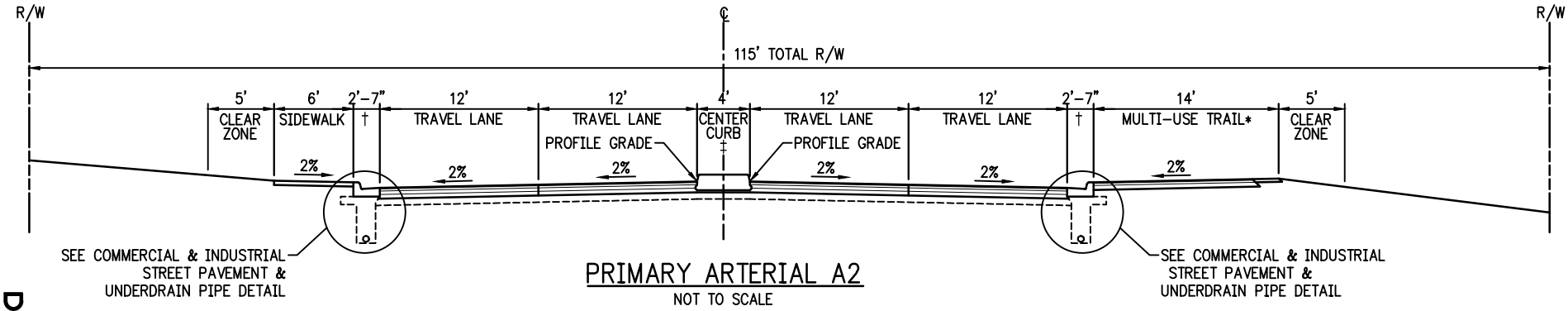

PRIMARY ARTERIAL A2

NOT TO SCALE

NOTE: THE WIDTHS IN ARTERIAL A2 REPRESENT MINIMUMS, WHICH ARE ACCEPTABLE ONLY WITH A WAIVER FROM THE PLAN COMMISSION.

TRAFFIC ANALYSIS WILL DETERMINE WHICH ARTERIAL CROSS-SECTION IS APPROPRIATE (A, B, OR C).

MODIFICATIONS MAY BE ALLOWED TO ACCOMMODATE ALTERNATIVE STORMWATER TREATMENTS PER THE STORMWATER MANAGEMENT ORDINANCE.

* CONSTRUCT MULTI-USE TRAIL ON ONE SIDE IF ROADWAY IS DESIGNATED ON BROWNSBURG GREENWAYS MAP. IF NOT DESIGNATED, CONSTRUCT SIDEWALK ON BOTH SIDES.

** LANDSCAPING PER TOWN REQUIREMENTS.

† CURB & GUTTER (SEE CONCRETE CHAIR BACK CURB & GUTTER DETAIL)

‡ CENTER CURB (SEE CONCRETE CENTER CURB DETAIL)

DETAIL NO. RS-01
REVISION DATE: APRIL 2013

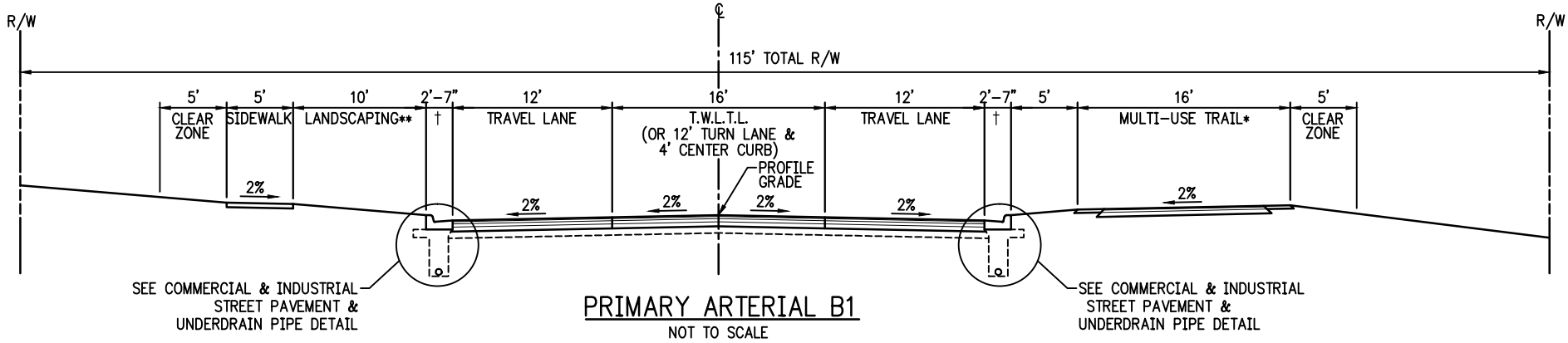

PRIMARY ARTERIAL B1

NOT TO SCALE

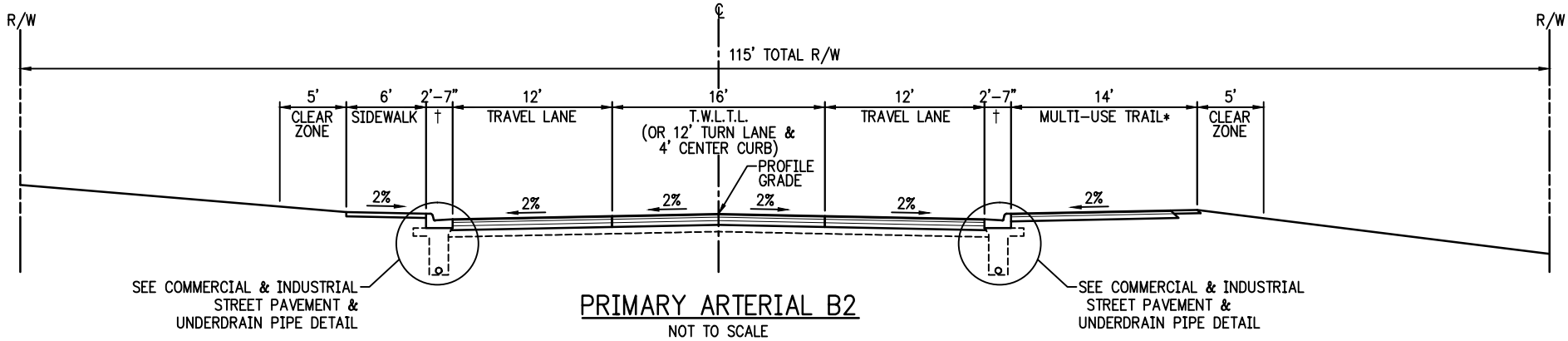

PRIMARY ARTERIAL B2

NOT TO SCALE

NOTE: THE WIDTHS IN ARTERIAL B2 REPRESENT MINIMUMS, WHICH ARE ACCEPTABLE ONLY WITH A WAIVER FROM THE PLAN COMMISSION.

TRAFFIC ANALYSIS WILL DETERMINE WHICH ARTERIAL CROSS-SECTION IS APPROPRIATE (A, B, OR C).

MODIFICATIONS MAY BE ALLOWED TO ACCOMMODATE ALTERNATIVE STORMWATER TREATMENTS PER THE STORMWATER MANAGEMENT ORDINANCE.

* CONSTRUCT MULTI-USE TRAIL ON ONE SIDE IF ROADWAY IS DESIGNATED ON BROWNSBURG GREENWAYS MAP. IF NOT DESIGNATED, CONSTRUCT SIDEWALK ON BOTH SIDES.

** LANDSCAPING PER TOWN REQUIREMENTS.

† CURB & GUTTER (SEE CONCRETE CHAIR BACK CURB & GUTTER DETAIL)

DETAIL NO. RS-02
REVISION DATE: APRIL 2013

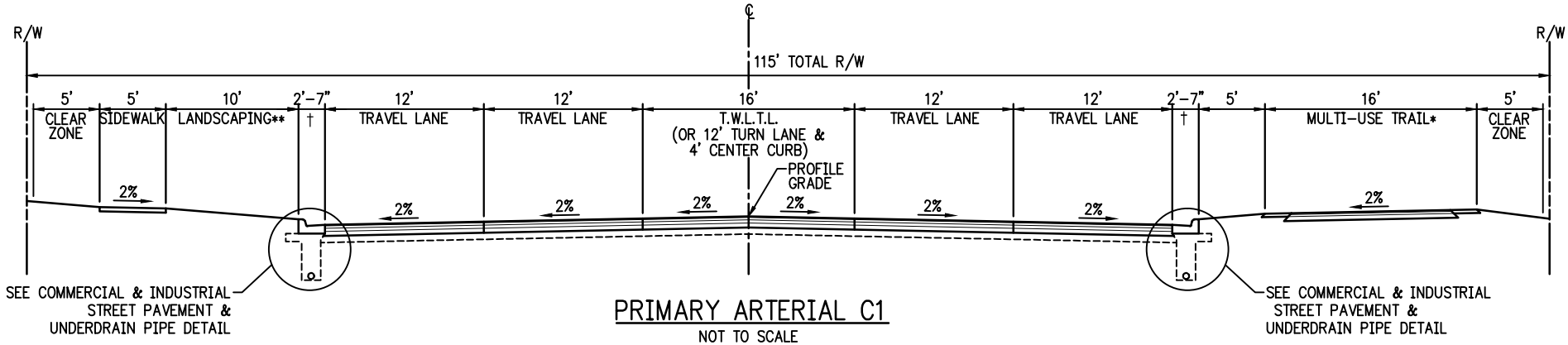

PRIMARY ARTERIAL C1

NOT TO SCALE

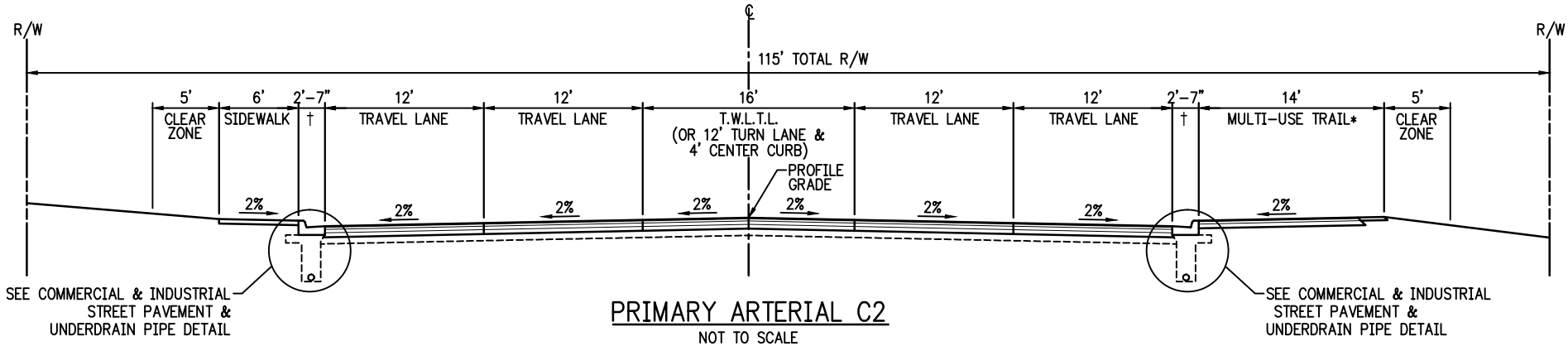

PRIMARY ARTERIAL C2

NOT TO SCALE

* CONSTRUCT MULTI-USE TRAIL ON ONE SIDE IF ROADWAY IS DESIGNATED ON BROWNSBURG GREENWAYS MAP. IF NOT DESIGNATED, CONSTRUCT SIDEWALK ON BOTH SIDES.

** LANDSCAPING PER TOWN REQUIREMENTS.

† CURB & GUTTER (SEE CONCRETE CHAIR BACK CURB & GUTTER DETAIL)

NOTE: THE WIDTHS IN ARTERIAL C2 REPRESENT MINIMUMS, WHICH ARE ACCEPTABLE ONLY WITH A WAIVER FROM THE PLAN COMMISSION.

TRAFFIC ANALYSIS WILL DETERMINE WHICH ARTERIAL CROSS-SECTION IS APPROPRIATE (A, B, OR C).

MODIFICATIONS MAY BE ALLOWED TO ACCOMMODATE ALTERNATIVE STORMWATER TREATMENTS PER THE STORMWATER MANAGEMENT ORDINANCE.

DETAIL NO. RS-03
REVISION DATE: APRIL 2013

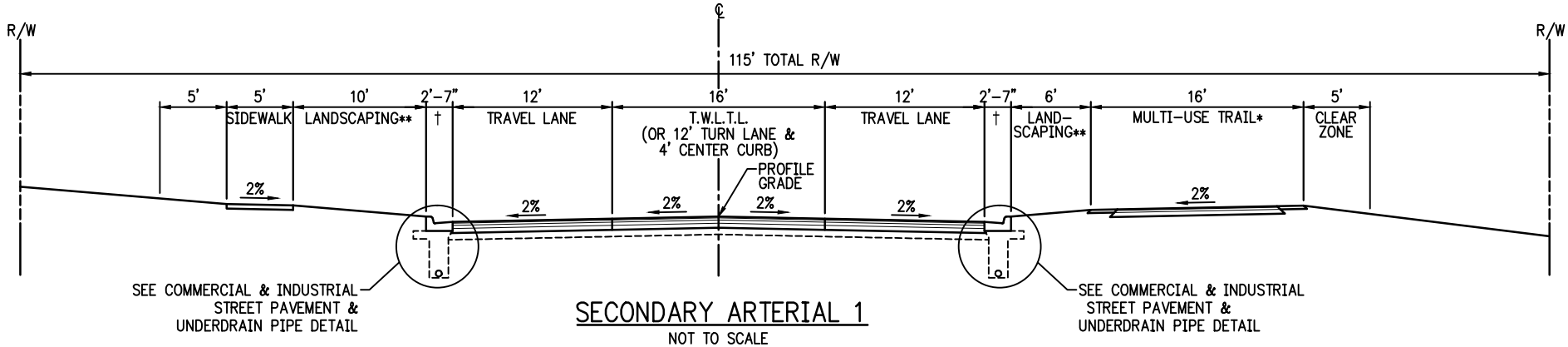

SECONDARY ARTERIAL 1

NOT TO SCALE

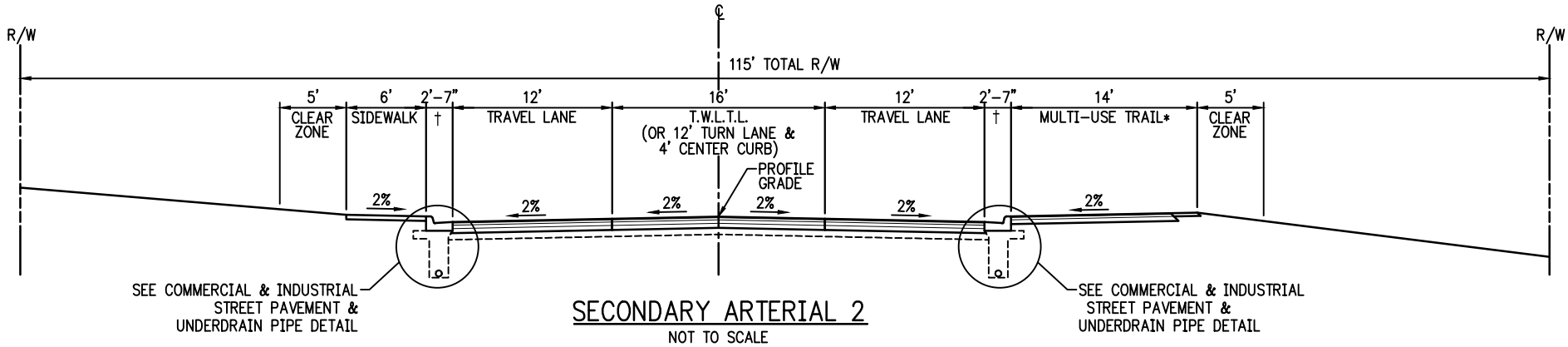

SECONDARY ARTERIAL 2

NOT TO SCALE

NOTE: THE WIDTHS IN ARTERIAL 2 REPRESENT MINIMUMS, WHICH ARE ACCEPTABLE ONLY WITH A WAIVER FROM THE PLAN COMMISSION.

MODIFICATIONS MAY BE ALLOWED TO ACCOMMODATE ALTERNATIVE STORMWATER TREATMENTS PER THE STORMWATER MANAGEMENT ORDINANCE.

* CONSTRUCT MULTI-USE TRAIL ON ONE SIDE IF ROADWAY IS DESIGNATED ON BROWNSBURG GREENWAYS MAP. IF NOT DESIGNATED, CONSTRUCT SIDEWALK ON BOTH SIDES.

** LANDSCAPING PER TOWN REQUIREMENTS.

† CURB & GUTTER (SEE CONCRETE CHAIR BACK CURB & GUTTER DETAIL)

DETAIL NO. RS-04
REVISION DATE: APRIL 2013

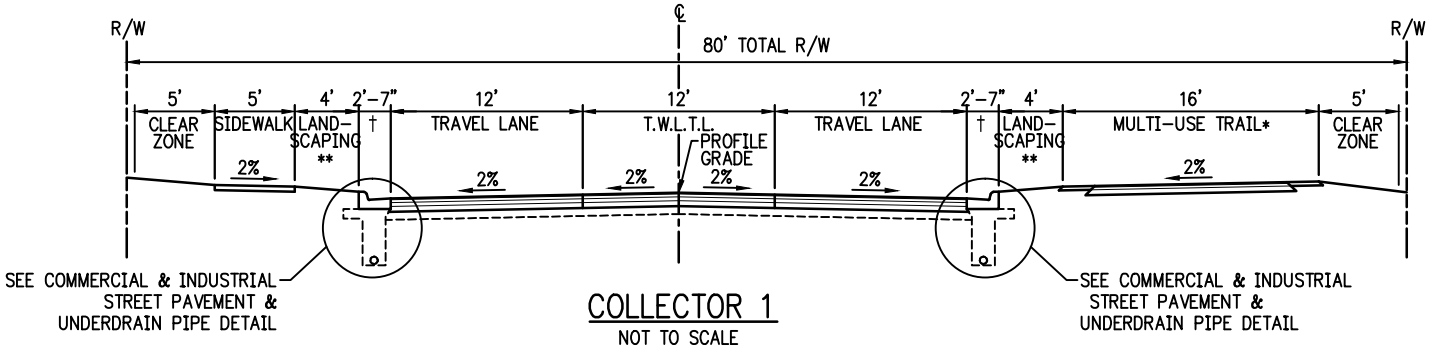

COLLECTOR 1

NOT TO SCALE

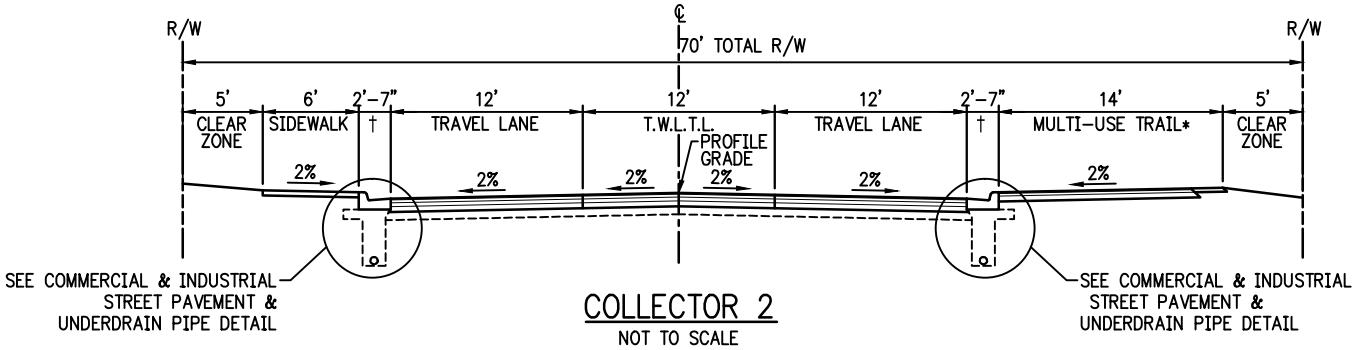

COLLECTOR 2

NOT TO SCALE

NOTE: THE WIDTHS IN COLLECTOR 2 REPRESENT MINIMUMS, WHICH ARE ACCEPTABLE ONLY WITH A WAIVER FROM THE PLAN COMMISSION.

MODIFICATIONS MAY BE ALLOWED TO ACCOMMODATE ALTERNATIVE STORMWATER TREATMENTS PER THE STORMWATER MANAGEMENT ORDINANCE.

* CONSTRUCT MULTI-USE TRAIL ON ONE SIDE IF ROADWAY IS DESIGNATED ON BROWNSBURG GREENWAYS MAP. IF NOT DESIGNATED, CONSTRUCT SIDEWALK ON BOTH SIDES.

** LANDSCAPING PER TOWN REQUIREMENTS.

† CURB & GUTTER (SEE CONCRETE CHAIR BACK CURB & GUTTER DETAIL)

DETAIL NO. RS-05
REVISION DATE: APRIL 2013

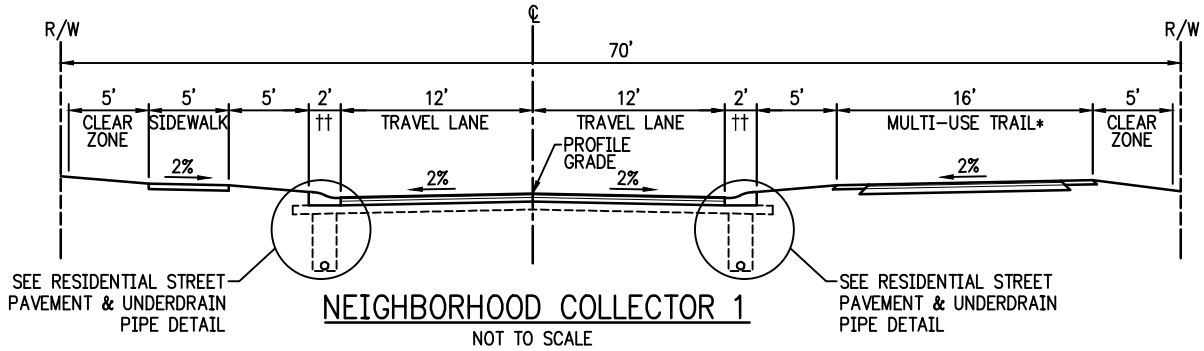

NEIGHBORHOOD COLLECTOR 1

NOT TO SCALE

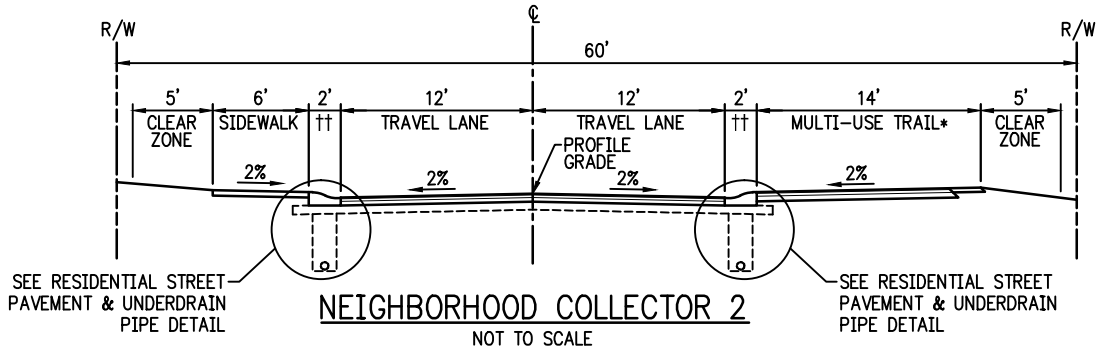

NEIGHBORHOOD COLLECTOR 2

NOT TO SCALE

NOTE: THE WIDTHS IN NEIGHBORHOOD COLLECTOR 2 REPRESENT MINIMUMS, WHICH ARE ACCEPTABLE ONLY WITH A WAIVER FROM THE PLAN COMMISSION.

MODIFICATIONS MAY BE ALLOWED TO ACCOMMODATE ALTERNATIVE STORMWATER TREATMENTS PER THE STORMWATER MANAGEMENT ORDINANCE.

* CONSTRUCT MULTI-USE TRAIL ON ONE SIDE IF ROADWAY IS DESIGNATED ON BROWNSBURG GREENWAYS MAP. IF NOT DESIGNATED, CONSTRUCT SIDEWALK ON BOTH SIDES.

** LANDSCAPING PER TOWN REQUIREMENTS.

†† CURB & GUTTER (SEE CONCRETE ROLL CURB & GUTTER DETAIL)

DETAIL NO. RS-06
REVISION DATE: APRIL 2013

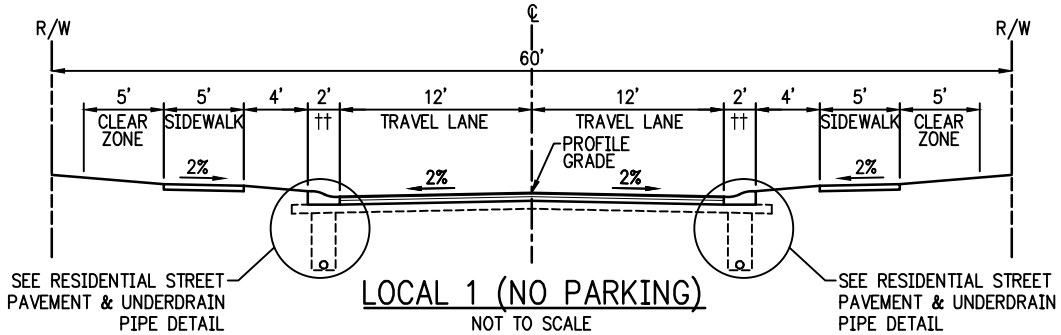

LOCAL 1 (NO PARKING)

NOT TO SCALE

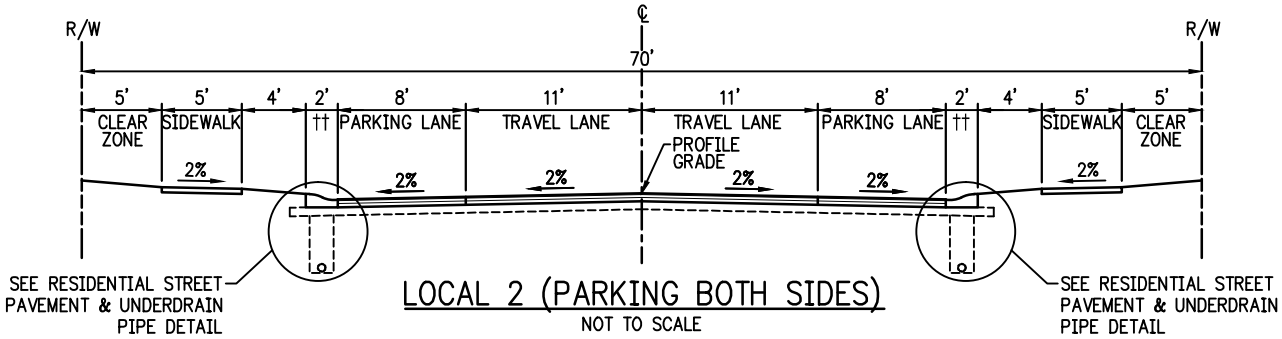

LOCAL 2 (PARKING BOTH SIDES)

NOT TO SCALE

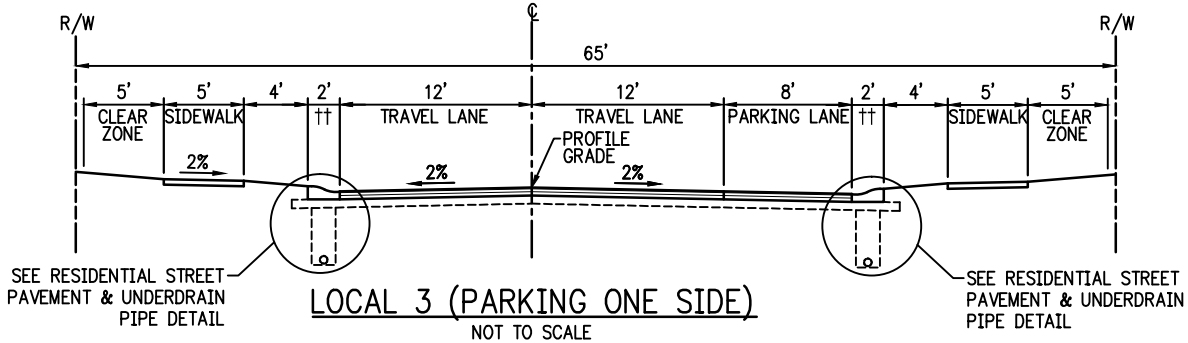

LOCAL 3 (PARKING ONE SIDE)

NOT TO SCALE

NOTE: PLAN COMMISSION WILL DESIGNATE WHETHER LOCAL ROAD 1, 2, OR 3 IS APPROPRIATE ON A CASE-BY-CASE BASIS. PARKING LANES(S) MUST BE INDICATED WITH PAVEMENT MARKINGS. "NO PARKING" AREAS MUST BE INDICATED WITH SIGNAGE.

MODIFICATIONS MAY BE ALLOWED TO ACCOMMODATE ALTERNATIVE STORMWATER TREATMENTS PER THE STORMWATER MANAGEMENT ORDINANCE.

NOTE CONT'D. ONE SIDE OF LOCAL 1 MUST BE DESIGNATED A FIRE LANE.

ADEQUATE OFF-STREET PARKING MUST BE PROVIDED FOR ALL LAND USES IF LOCAL 1 IS USED, AS DETERMINED BY THE PLAN COMMISSION DURING THE PRIMARY PLAT AND/OR SITE DEVELOPMENT PLAN APPROVAL PROCESS.

** LANDSCAPING PER TOWN REQUIREMENTS.

†† CURB & GUTTER (SEE CONCRETE ROLL CURB & GUTTER DETAIL)

DETAIL NO. RS-07
REVISION DATE: APRIL 2013

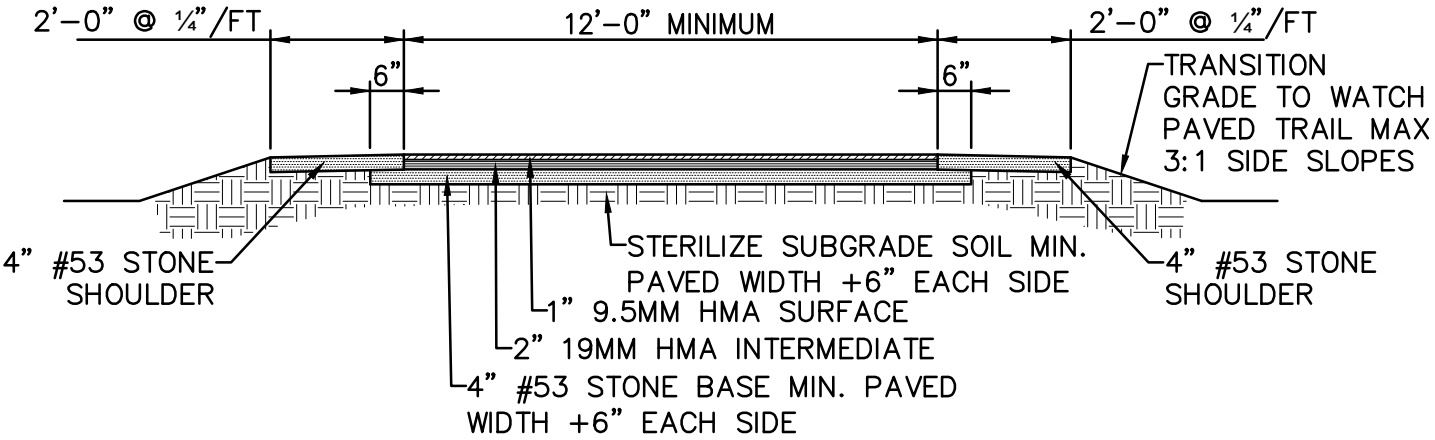

NOTE: CROSS SLOPE SHALL BE ¼"/FT

TYPICAL TRAIL CROSS SECTION

SCALE: NONE

DETAIL NO. RS-08
REVISION DATE: APRIL 2013

Plotted: 4/08/13 @ 4:22pm. DWG: F:\2013\13-2944 Brownsburg Standards Update\CAD Details\13_2944 STANDARD STREETS AND TRANSPORTATION DETAILS.dwg, Layout: RS-08, By: JSwick

CONSTRUCTION DETAILS

DW - DRINKING WATER SYSTEMS

TABLE OF CONTENTS

Transition Coupling DW-01
Gate Valve DW-02
Air Release Valve DW-03
Hydrant Assembly DW-04
Tracer Wire Bolted Connection DW-05
Water Main Reaction Blocking DW-06
Water Main Restrained Piping DW-07
Cross Tap Configuration DW-08
Valve Placement at Intersections DW-09
Meter Pit Easement DW-10
Water Service Benching DW-11
Combined Fire Domestic Service & Meter Vault DW-12
Compound Metering and Meter Pit DW-13

TOWN OF Brownsburg

MAY 2013

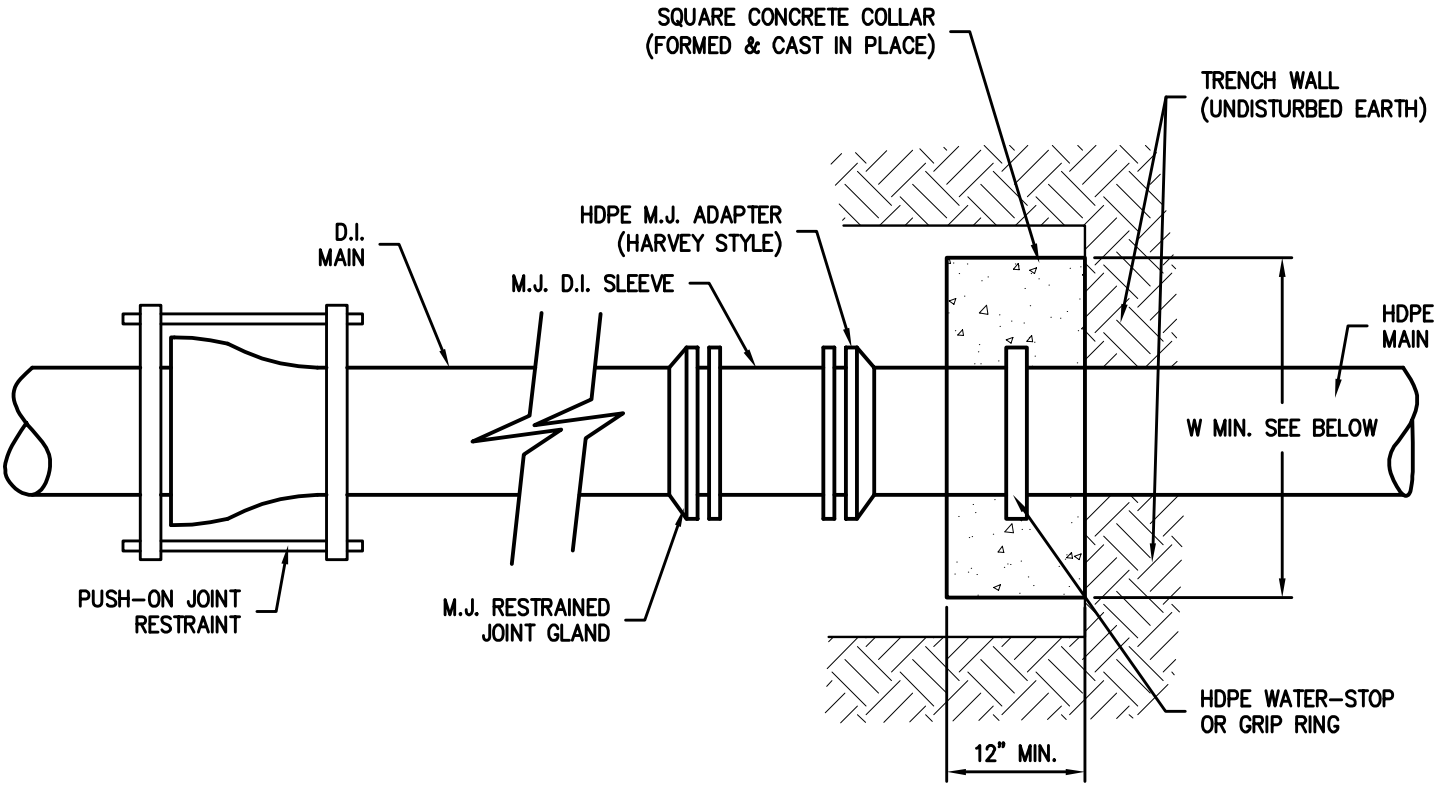

PIPE SIZE	BRACING AREA OF CONCRETE COLLAR	W MIN.
6"	5 SQ. FT.	3'-0"
8"	9 SQ. FT.	3'-6"
12"	18 SQ. FT.	4'-3"

TRANSITION COUPLING

NO SCALE

DETAIL NO. DW-01
REVISION DATE: MAY 2013

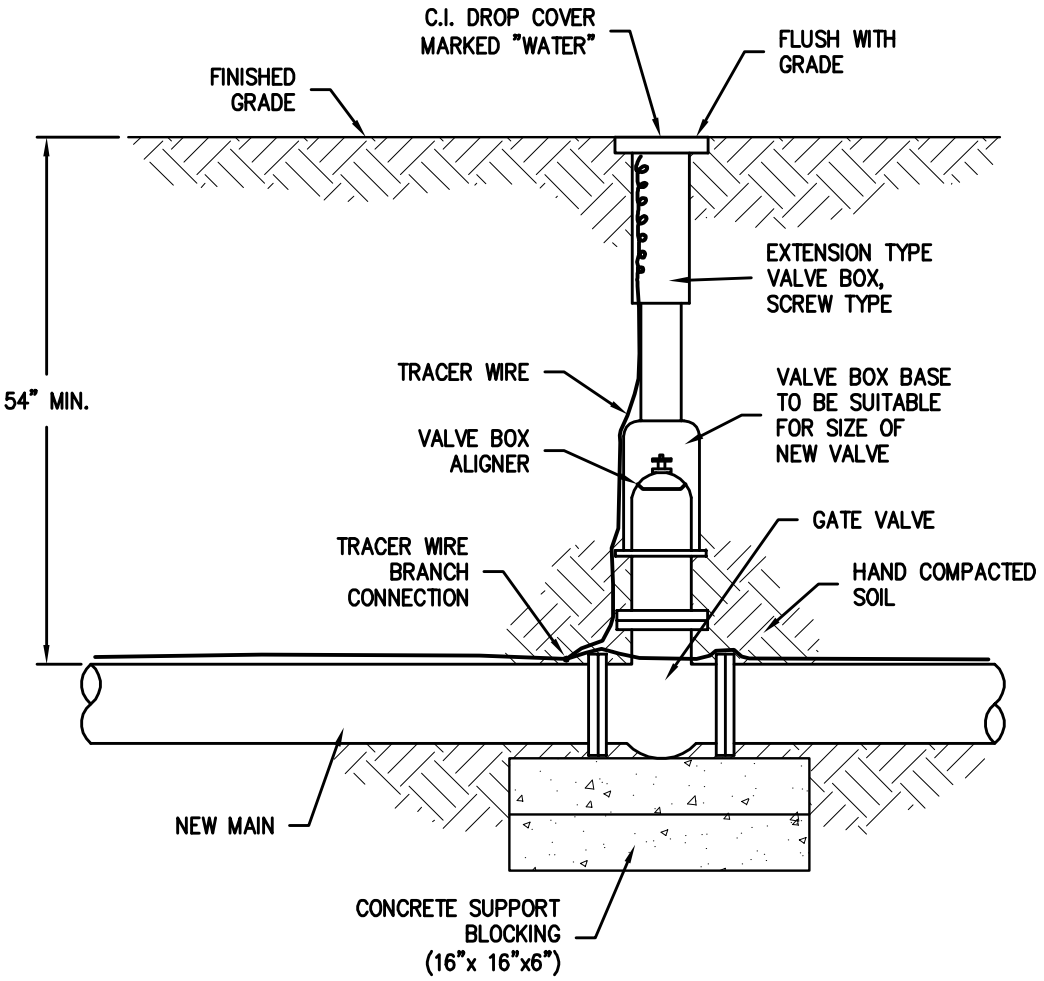

GATE VALVE

NO SCALE

DETAIL NO. DW-02
REVISION DATE: MAY 2013

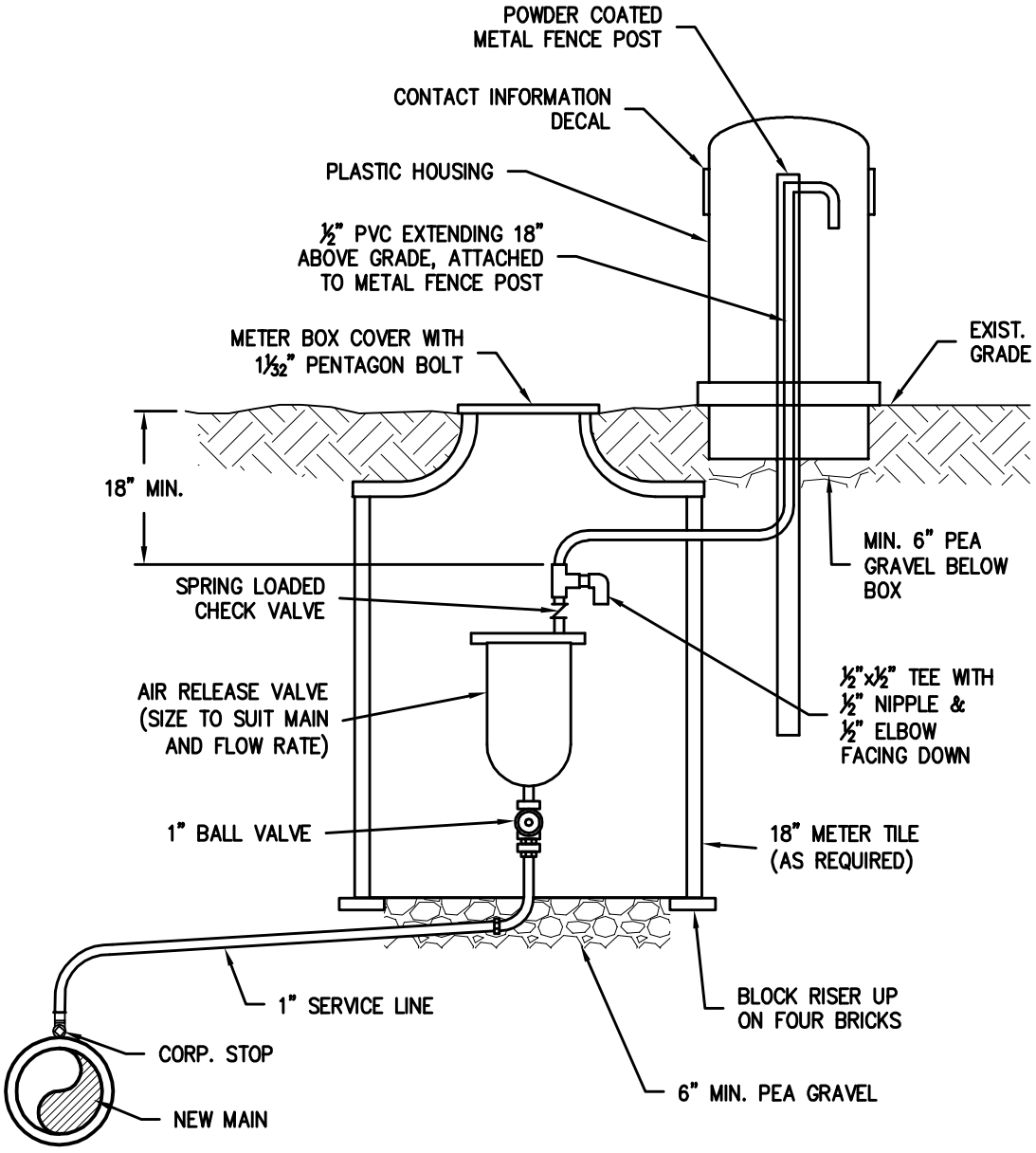

AIR RELEASE VALVE

NO SCALE

DETAIL NO. DW-03
REVISION DATE: MAY 2013

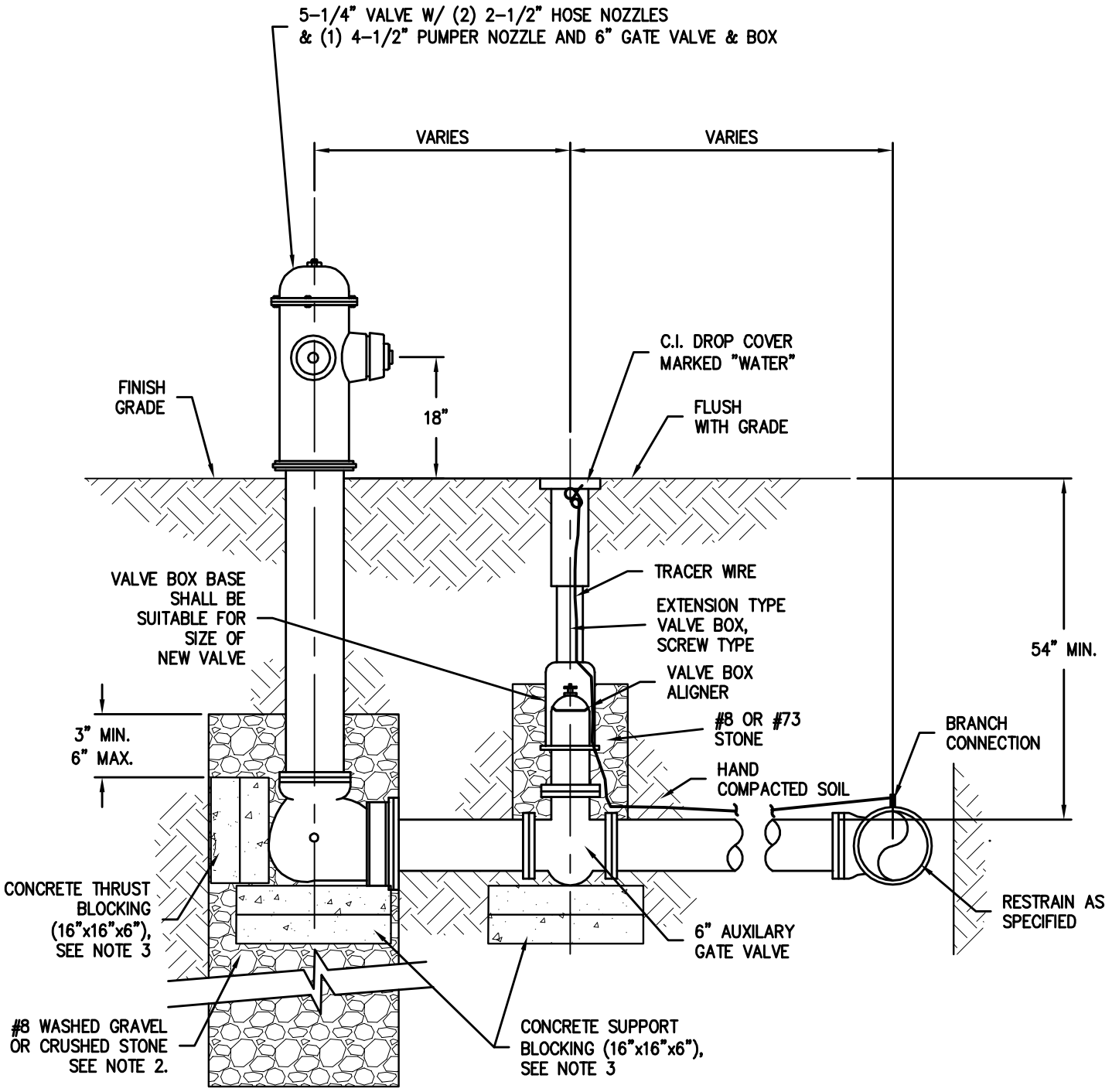

NOTES:

1. SET HYDRANT & VALVE AND BOX ON CONCRETE SUPPORT BLOCKING.
2. PLACE 2'x3' DEEP DRAINAGE PIT, EXTEND A MINIMUM OF 3", AND MAXIMUM OF 6", ABOVE WEEP HOLES ON HYDRANT BOOT.
3. RESTRAINED FITTINGS SHALL BE USED IN ADDITION TO CONCRETE THRUST BLOCKING. RESTRAINTS MUST BE USED FROM THE DISTRIBUTION MAIN TO THE HYDRANT. PLACE CONCRETE BLOCKS BEHIND HYDRANT TO UNDISTURBED EARTH.
4. VALVE BOX SHALL BE CENTERED AND PLUMB OVER VALVE OPERATING NUT.

HYDRANT ASSEMBLY

NO SCALE

DETAIL NO. DW-04
REVISION DATE: MAY 2013

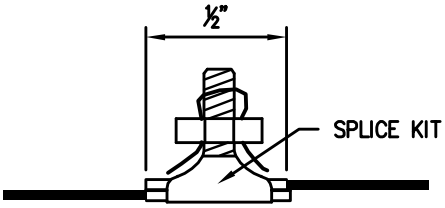

EXISTING CONNECTION

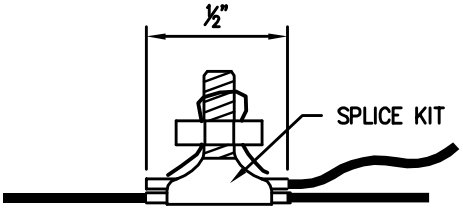

BRANCH CONNECTION

TRACER WIRE BOLTED CONNECTION

NO SCALE

DETAIL NO. DW-05
REVISION DATE: MAY 2013

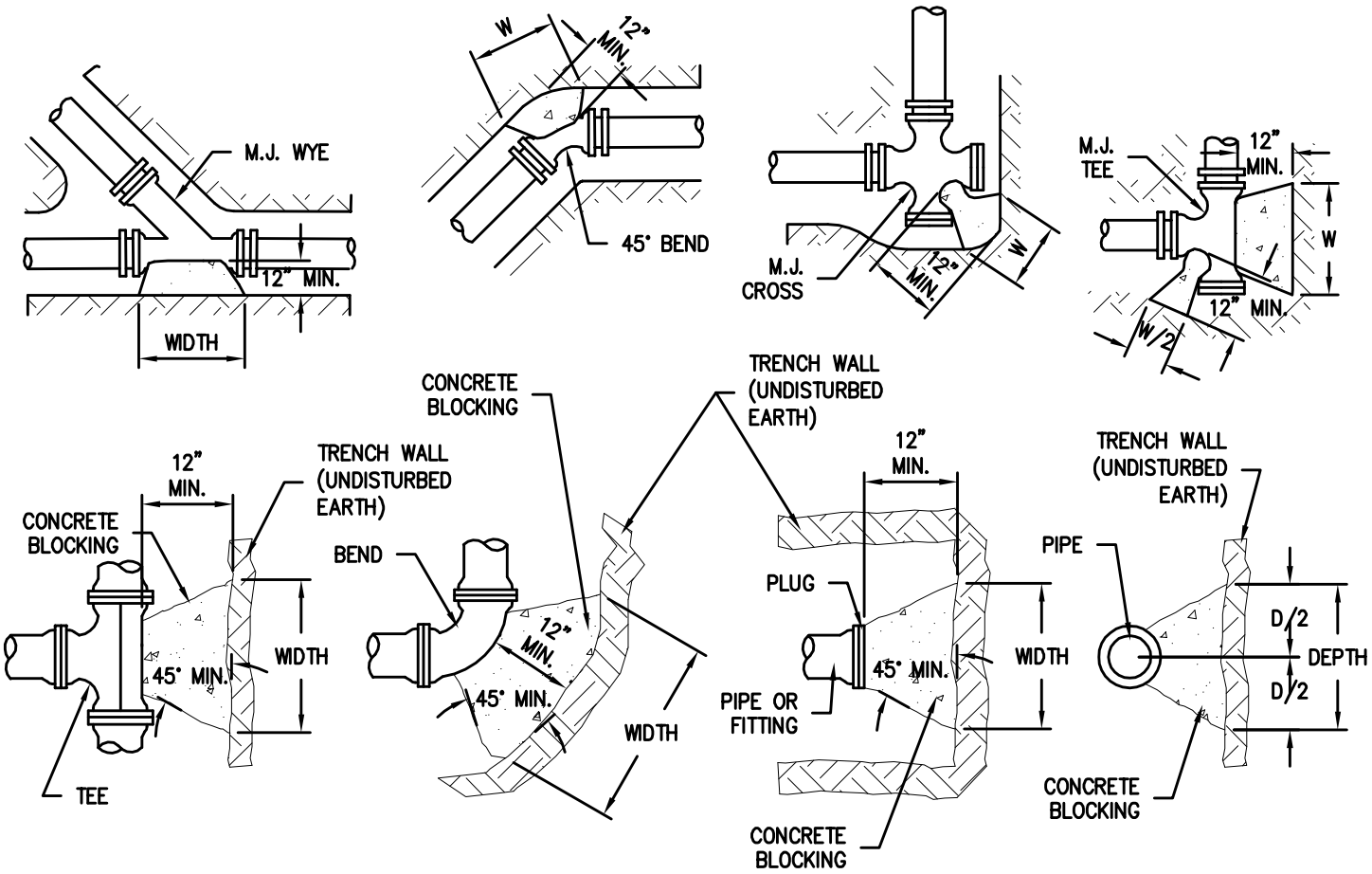

	TEE		22½°		45°		90°		PLUG		WYE		CROSS	
SIZE	W	D	W	D	W	D	W	D	W	D	W	D	W	D
3", 4"	2'-6"	1'-0"	1'-0"	0'-9"	1'-6"	1'-3"	2'-9"	1'-3"	1'-6"	1'-6"	2'-6"	1'-0"	2'-9"	1'-3"
6"	3'-3"	1'-6"	2'-0"	1'-0"	2'-6"	1'-6"	4'-3"	1'-6"	2'-3"	2'-3"	3'-3"	1'-6"	4'-3"	1'-6"
8"	4'-3"	2'-0"	2'-0"	1'-9"	3'-9"	1'-9"	6'-0"	2'-0"	3'-0"	3'-0"	4'-3"	2'-0"	6'-0"	2'-0"
10"	5'-3"	2'-6"	3'-0"	1'-9"	4'-0"	2'-6"	7'-3"	2'-6"	3'-9"	3'-9"	5'-3"	2'-6"	7'-3"	2'-6"
12"	6'-0"	3'-0"	3'-6"	2'-0"	4'-9"	3'-6"	7'-9"	3'-0"	4'-3"	4'-3"	6'-0"	3'-0"	7'-9"	3'-0"

NOTES:
1. CONCRETE REACTION BLOCKING SHALL NOT COVER PIPE JOINTS, BOLTS, OR GLANDS.

WATER MAIN REACTION BLOCKING

NO SCALE

DETAIL NO. DW-06
REVISION DATE: MAY 2013

TABLE 1: DI PIPE RESTRAINT FOR BEDDING OUTSIDE PAVEMENT LOADING ZONE

FEET OF RESTRAINED PIPE @ 150 PSI					
	WATER MAIN SIZE				
FITTING TYPE	4 INCH	6 INCH	8 INCH	10 INCH	12 INCH
11 1/4° BEND	4'	5'	6'	7'	9'
22 1/2° BEND	6'	9'	12'	14'	17'
45° BEND	13'	19'	24'	29'	34'
90° BEND	31'	44'	57'	70'	83'
25 1/2° VERTICAL BEND	9'	13'	17'	20'	24'
45° VERTICAL BEND	18'	26'	34'	42'	50'
VALVE/PLUG	22'	32'	41'	51'	60'
TEE OUTLET	22'	32'	41'	51'	60'

NOTE: TYPE 2 TRENCH, CLAY BACKFILL

TABLE 2: DI PIPE RESTRAINT FOR BEDDING INSIDE PAVEMENT LOADING ZONE

FEET OF RESTRAINED PIPE @ 150 PSI					
	WATER MAIN SIZE				
FITTING TYPE	4 INCH	6 INCH	8 INCH	10 INCH	12 INCH
11 1/4° BEND	1'	2'	2'	2'	3'
22 1/2° BEND	2'	3'	3'	4'	5'
45° BEND	4'	5'	6'	8'	9'
90° BEND	8'	12'	15'	18'	21'
22 1/2° VERTICAL BEND	4'	6'	8'	9'	11'
45° VERTICAL BEND	9'	12'	15'	19'	22'
VALVE/PLUG	20'	29'	37'	45'	52'
TEE OUTLET	20'	29'	37'	45'	52'

NOTE: TYPE 4 TRENCH, SAND/GRANULAR BACKFILL

WATER MAIN RESTRAINED PIPING

NO SCALE

DETAIL NO. DW-07
REVISION DATE: MAY 2013

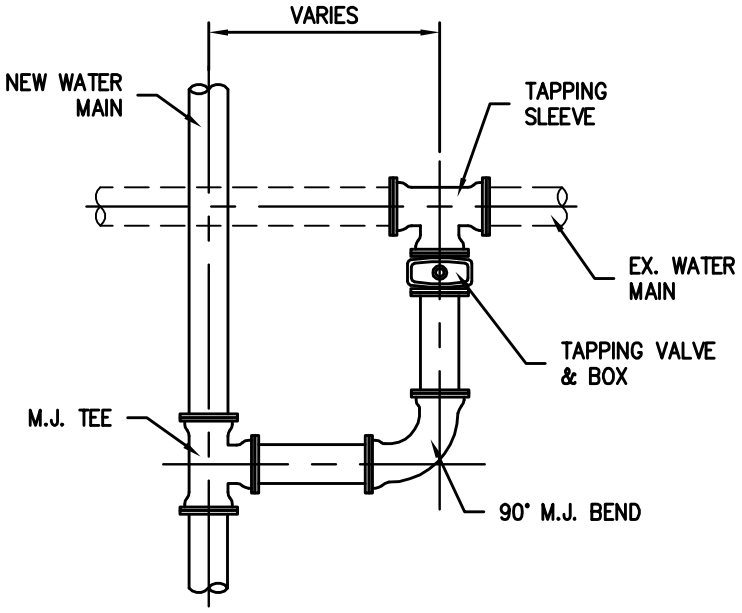

PLAN VIEW

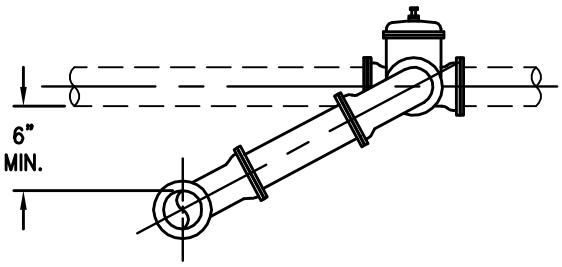

SECTION VIEW

NOTES:
1. USE RESTRAINED MECHANICAL JOINT FITTINGS IN ADDITION TO CONCRETE THRUST BLOCKING.

CROSS TAP CONFIGURATION

NO SCALE

DETAIL NO. DW-08
REVISION DATE: MAY 2013

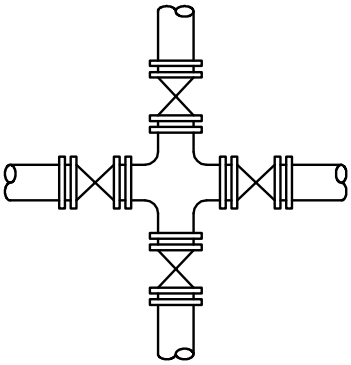

4 VALVES REQUIRED AT "CROSS"

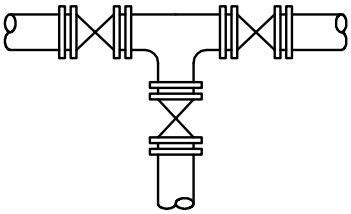

3 VALVES REQUIRED AT "TEE"

VALVE PLACEMENT AT INTERSECTIONS

NO SCALE

DETAIL NO. DW-09
REVISION DATE: MAY 2013

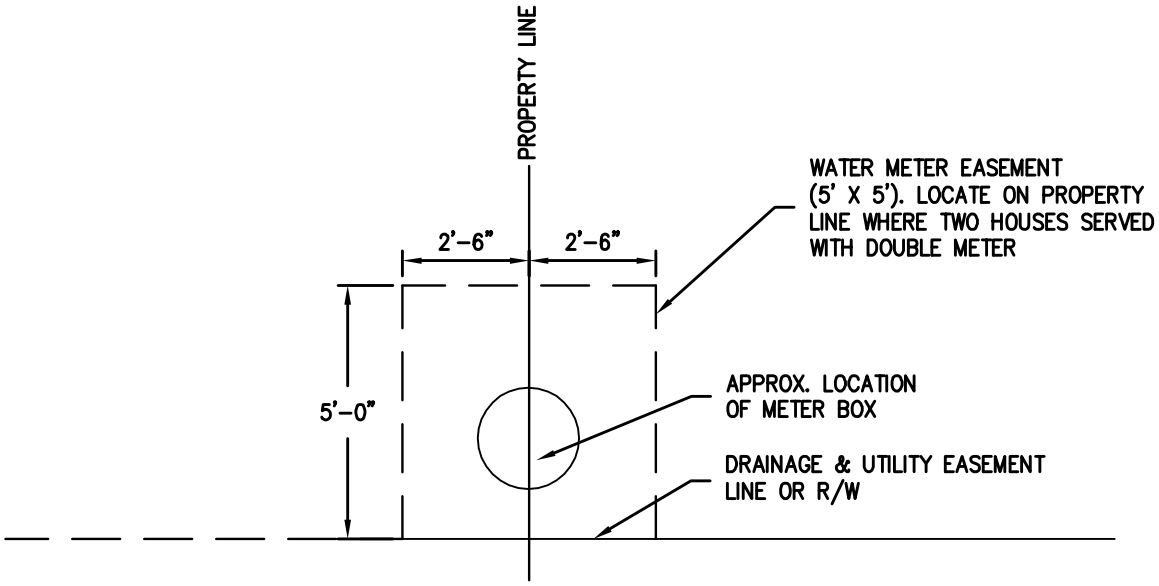

NOTES:
1. REQUIRES PRE-APPROVAL BY TOWN OF BROWNSBURG.

METER PIT EASEMENT

NO SCALE

DETAIL NO. DW-10
REVISION DATE: MAY 2013

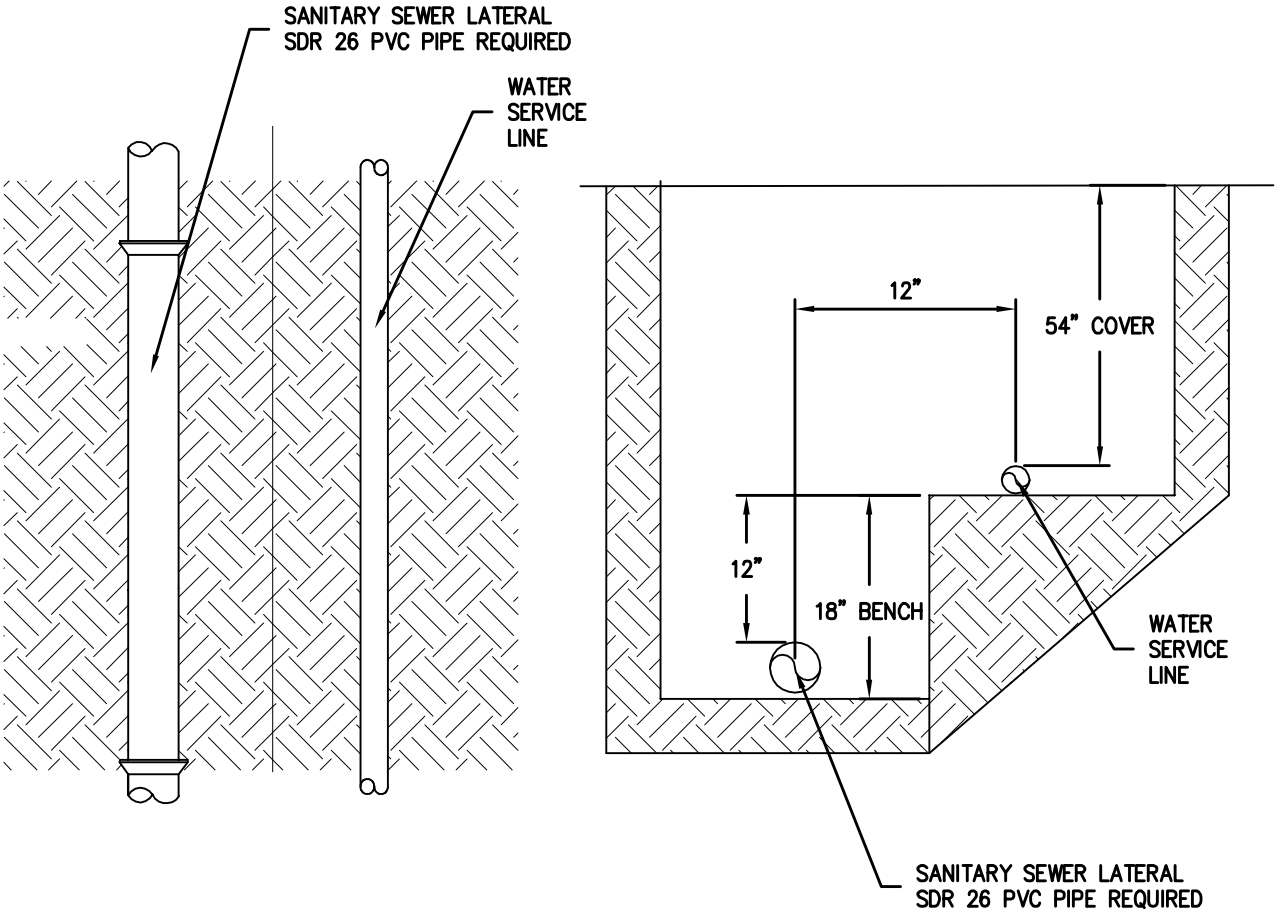

WATER SERVICE BENCHING

NO SCALE

DETAIL NO. DW-11
REVISION DATE: MAY 2013

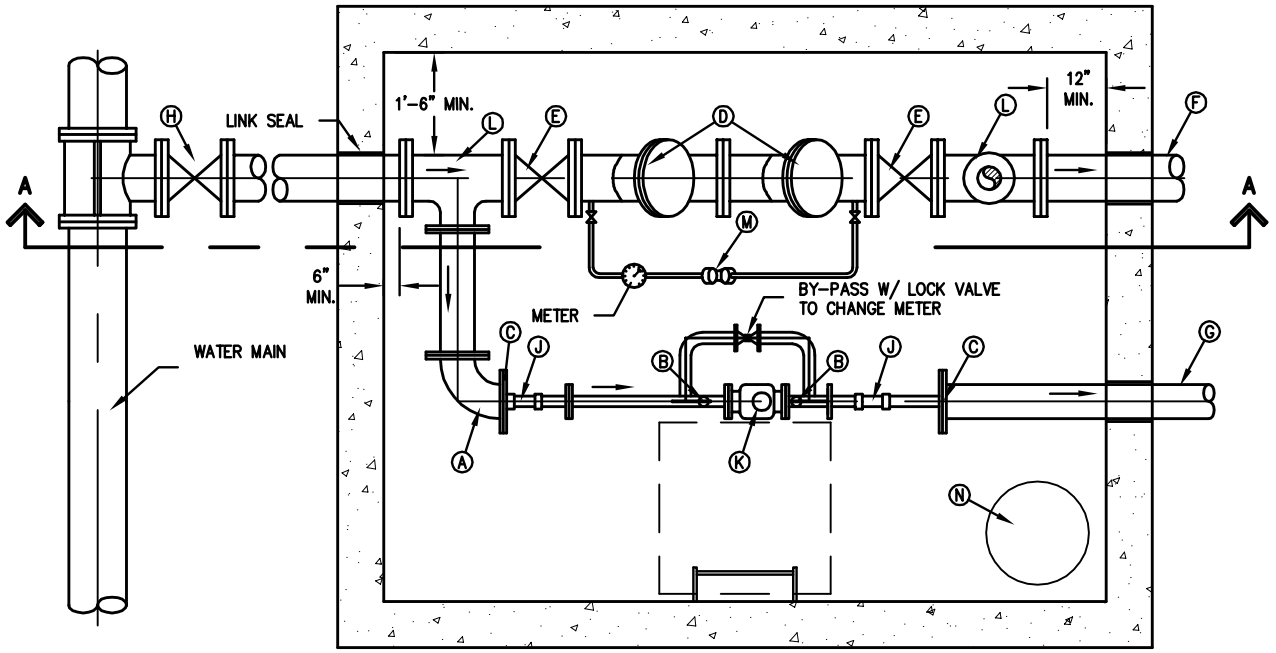

PLAN VIEW

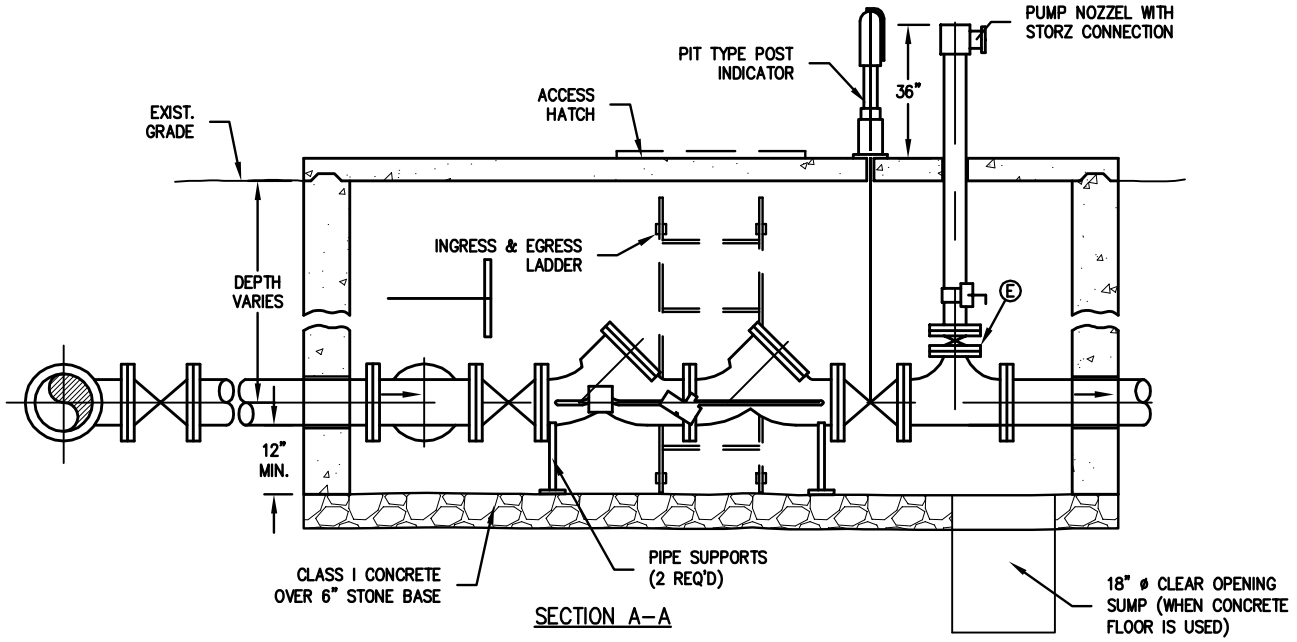

SECTION A–A

KEYED NOTES:

- Ⓐ 90° FLANGED BEND w/ PIPE SUPPORT
- Ⓑ BALL VALVE w/ FLANGED END
- Ⓒ REDUCING FLANGE
- Ⓓ DOUBLE DETECTOR CHECK VALVE ASS'Y
- Ⓔ FLANGED OS & Y VALVE
- Ⓕ FIRE LINE
- Ⓖ DOMESTIC SERVICE
- Ⓗ MECHANICAL JOINT GATE VALVE & BOX
- Ⓘ TAPPING SLEEVE w/ TAPPING VALVE & BOX
- Ⓙ LOK–PAK
- Ⓚ METER – (BY UTILITY)
- Ⓛ FLANGED TEE
- Ⓜ DOUBLE CHECK VALVE
- Ⓝ SUMP (USE WHEN FLOOR IS CONCRETE)

NOTES:

1. CONTRACTOR SHALL CONSTRUCT METER VAULT.
2. CONSTRUCTION MATERIALS: CONCRETE, OR PRECAST/CAST–IN–PLACE AS DIRECTED BY WATER COMPANY.
3. INSIDE DIMENSIONS PER DRAWING NOTES. VAULT TO BE SET LENGTHWISE WITH SERVICE.
4. TOP OF VAULT TO BE CONCRETE, AT LEAST 4" THICK WITH REINFORCING. WHEN VAULT IS CONSTRUCTED IN PAVED AREAS, PAVEMENT IS TO BE LEVEL WITH TOP OF VAULT, AND THE TOP REINFORCED AS REQUIRED TO SUPPORT TRAFFIC LOADS. WHEN VAULT IS CONSTRUCTED IN GRASS PLOT, TOP OF VAULT SHALL CORRESPOND WITH FINISHED GRADE LEVEL OF SURROUNDING AREA.
5. BOTTOM OF VAULT TO BE MINIMUM OF 6" OF CRUSHED STONE OR 4" CONCRETE AS DIRECTED BY WATER COMPANY, WITH MINIMUM CLEARANCE OF 12" BELOW BOTTOM OF FIRE/SERVICE LINE.
6. CUSTOMER SHALL FURNISH 2" BALL VALVES ON OUTLET SIDE OF THE 2" METER SETTING.
7. CUSTOMER SHALL FURNISH DOUBLE DETECTOR CHECK VALVE. METER IS FURNISHED BY WATER COMPANY.
8. CUSTOMER SHALL FURNISH VAULT FRAME AND LID TO BE INSTALLED IN TOP OF VAULT BY CUSTOMER (BILCO J–2AL OR 30"x30" ALUMINUM PCM)
9. WATER COMPANY WILL INSTALL DOMESTIC SERVICE METER INTO THE VAULT. COMBINATION SERVICES CAN BE USED AT THE DISCRETION OF THE WATER COMPANY.
10. CUSTOMER SHOULD INSTALL A LADDER IN PIT FOR INGRESS AND EGRESS.
11. A 2" TEST PLUG SHALL BE INSTALLED AT LEAST 2 PIPE DIAMETERS DOWNSTREAM OF 2" OR LARGER METERS.

COMBINED FIRE DOMESTIC SERVICE & METER VAULT

NO SCALE

DETAIL NO. DW-12
REVISION DATE: MAY 2013

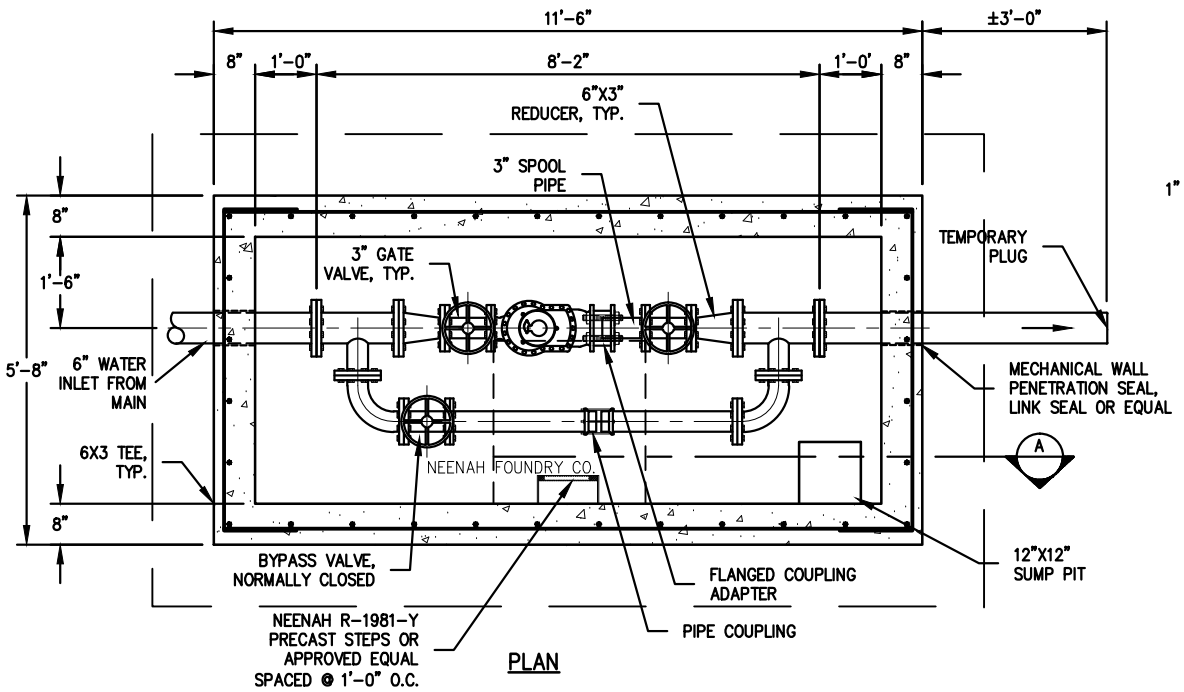

PLAN

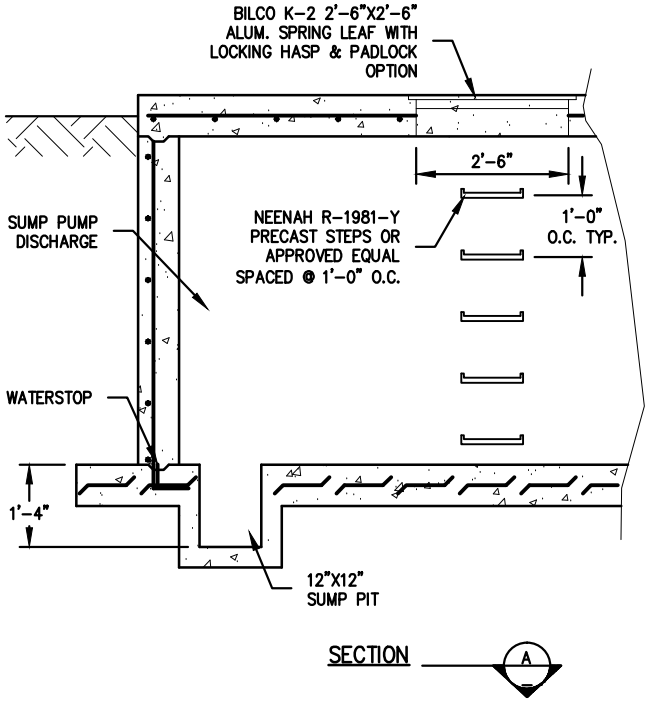

SECTION

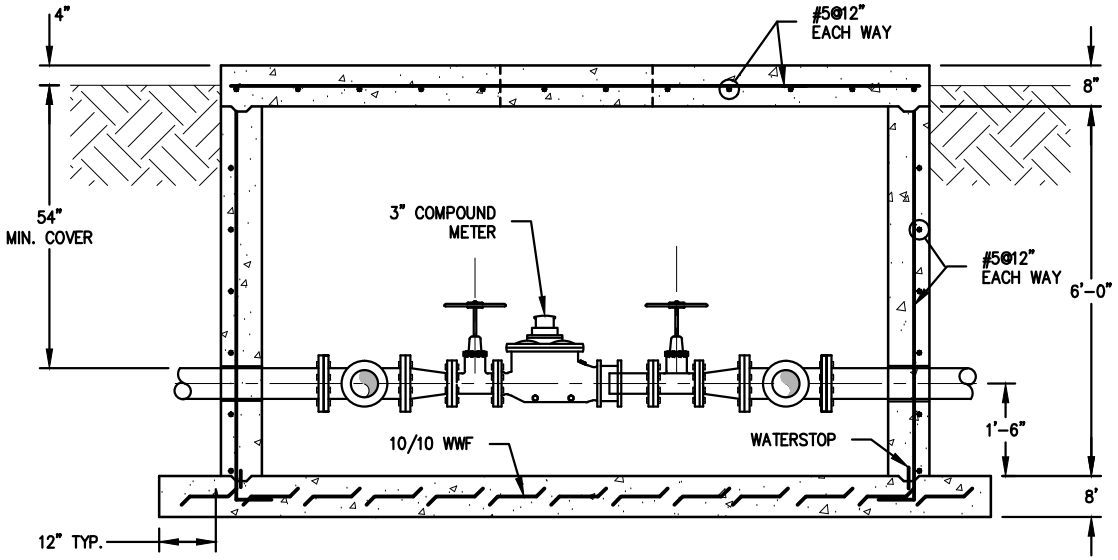

TYPICAL SECTION

NOTE TO USER: THIS DETAIL IS INTENDED AS AN EXAMPLE OF THE MINIMUM INFORMATION TO BE INCLUDED IN A COMPOUND METERING DETAIL. IT HAS NOT BEEN DRAWN TO A TRUE SCALE. A UNIQUE COMPOUND METERING DETAIL SHALL BE PREPARED FOR EACH PROJECT WHERE NEEDED, DRAWN TO A TRUE SCALE, SHOWING THE SPECIFIC FEATURES REQUIRED FOR THAT INSTALLATION.

COMPOUND METERING & METER PIT DETAILS

NO SCALE

DETAIL NO. DW-13
REVISION DATE: MAY 2013

CONSTRUCTION DETAILS

SW - STORMWATER AND DRAINAGE SYSTEMS

TABLE OF CONTENTS

Drainage Swale with Underdrain SW-01
Drainage Lateral in Rear of Lot SW-02
French Drain SW-03
Hybrid Ditch Trench SW-04
Modified Hybrid Ditch Trench SW-05
Hybrid Ditch Trench at Inlet SW-06
Hybrid Ditch Trench Profile SW-07
Metal Pipe End Section SW-08
Precast Concrete End Section SW-09
Trash Guard SW-10
Standard Storm Manhole SW-11
Type 1 Storm Manhole SW-12
Inlet Type A SW-13
Yard Inlet SW-14

TOWN OF Brownsburg

MAY 2013

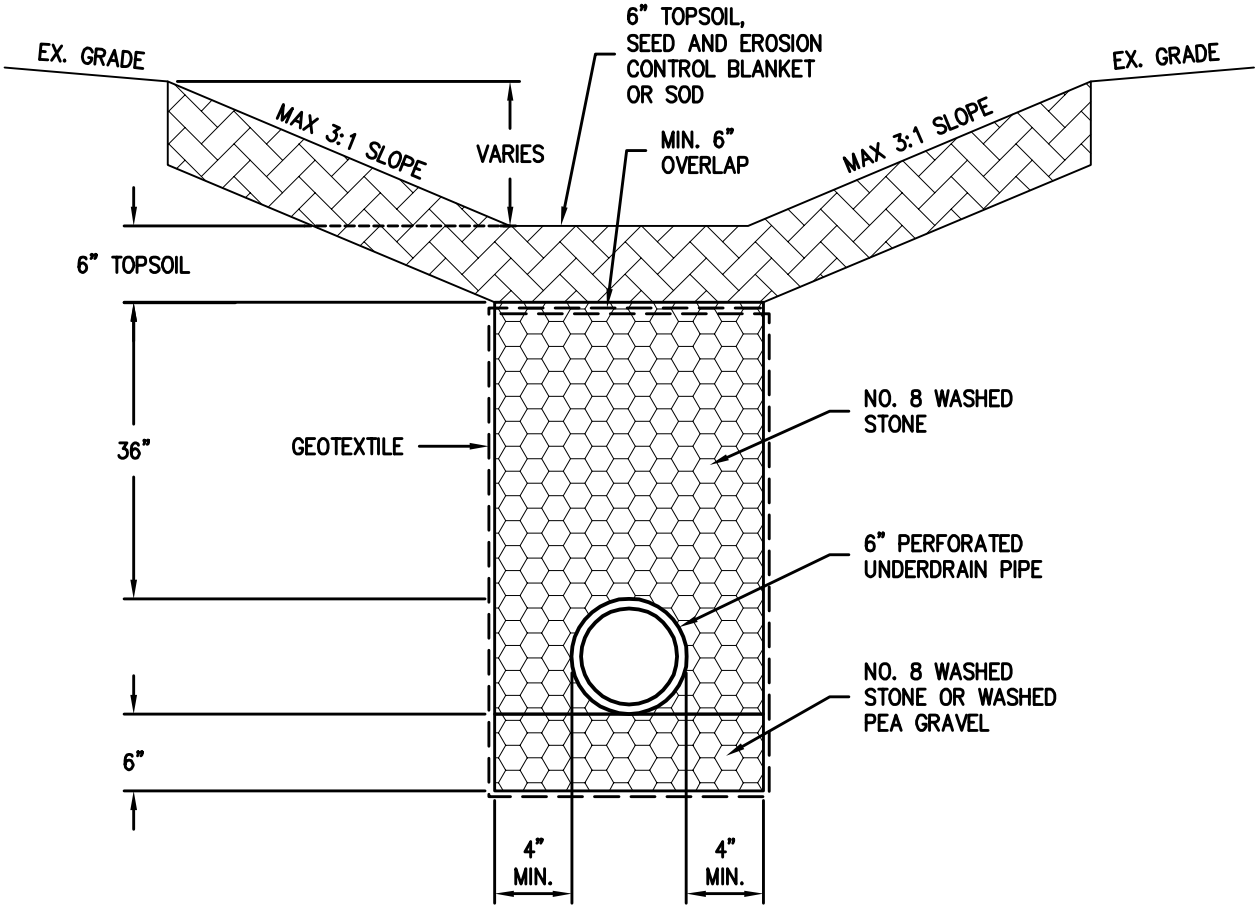

NOTES:

1. PIPE MATERIAL SHALL BE PERFORATED CORRUGATED POLYETHYLENE, AS SPECIFIED.

2. UNDERDRAIN CLEANOUT/RISERS REQUIRED EVERY 500 FEET.

DRAINAGE SWALE WITH UNDERDRAIN

NO SCALE

DETAIL NO. SW-01
REVISION DATE: MAY 2013

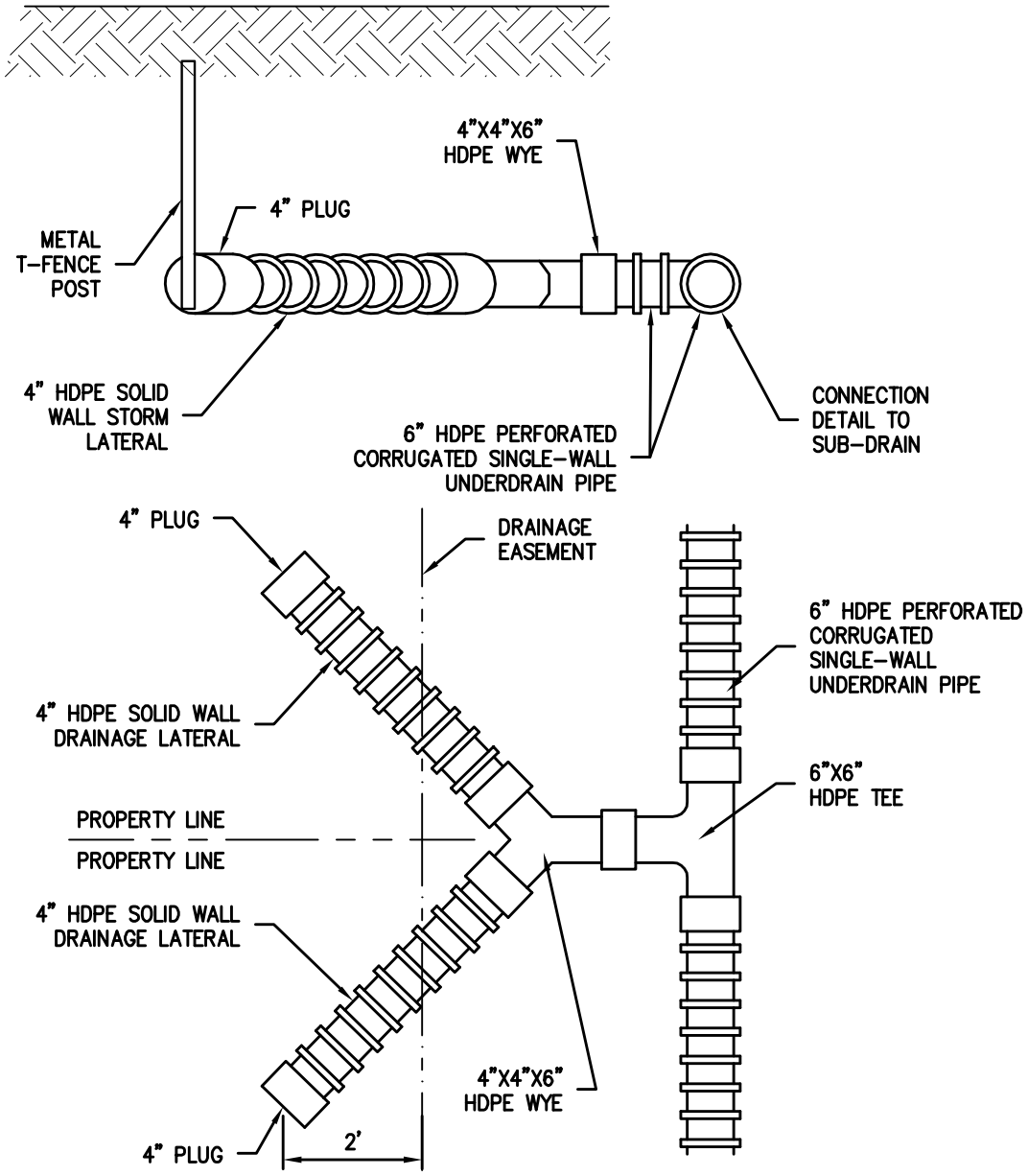

NOTES:

1. ROUTE ALL DRAINAGE LATERALS TO REAR YARD SWALES WHEN POSSIBLE.
2. IF CONNECTING SUMP PUMP DISCHARGE TO STORM SEWER SYSTEM, SUMP PUMP DISCHARGE PIPE MUST BE CONNECTED TO LATERAL WITH AN APPROPRIATE FITTING.
3. LATERAL LOCATIONS SHALL BE NOTED ON AS-BUILTS.

DRAINAGE LATERAL IN REAR OF LOT

NO SCALE

DETAIL NO. SW-02
REVISION DATE: MAY 2013

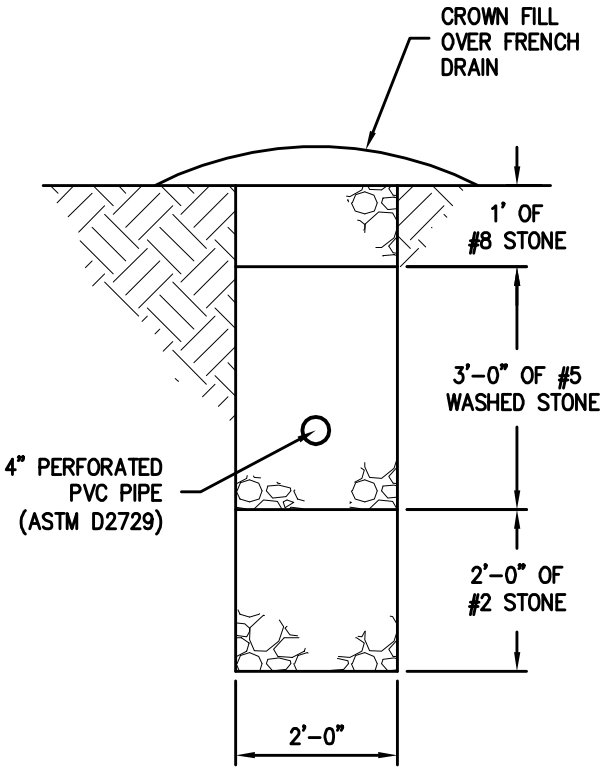

NOTES:
1. REQUIRES PRE-APPROVAL BY TOWN OF BROWNSBURG.

FRENCH DRAIN

NO SCALE

DETAIL NO. SW-03
REVISION DATE: MAY 2013

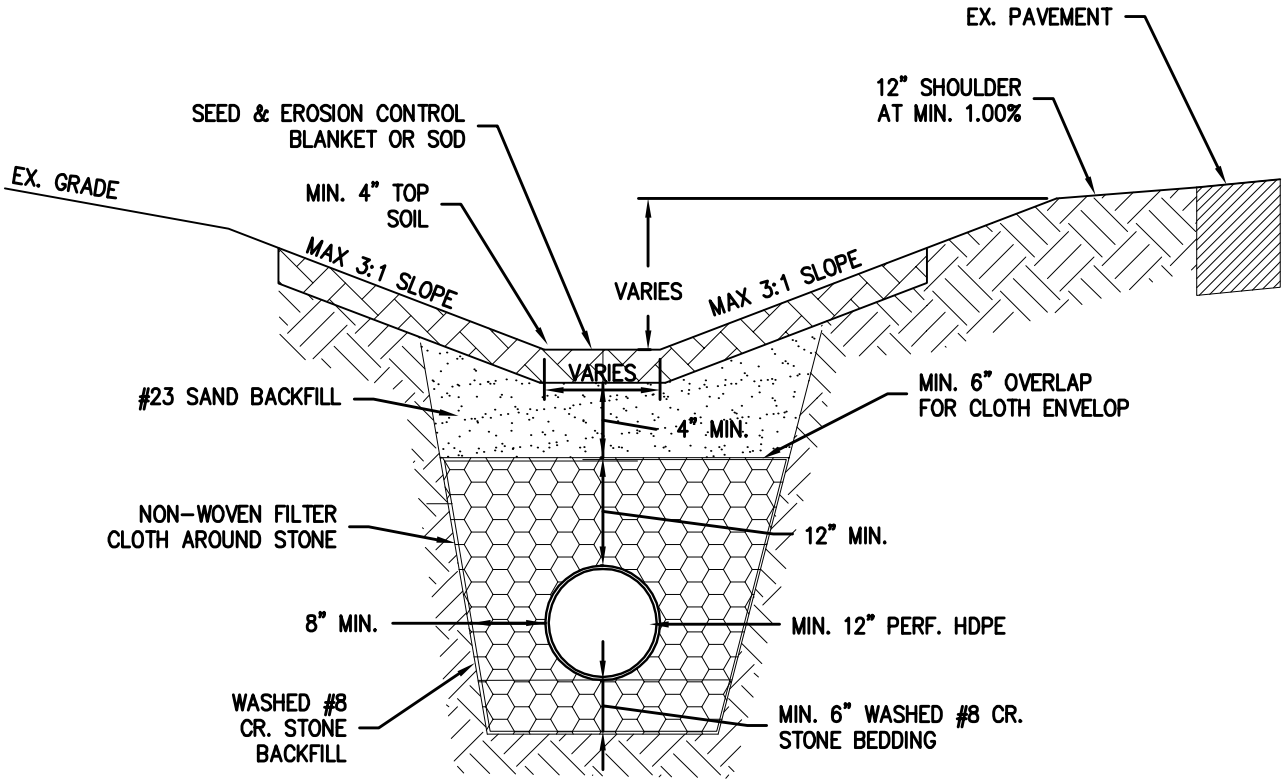

NOTES:
1. PIPE LOCATED DIRECTLY UNDER DITCH CENTERLINE.

HYBRID DITCH TRENCH

NO SCALE

DETAIL NO. SW-04
REVISION DATE: MAY 2013

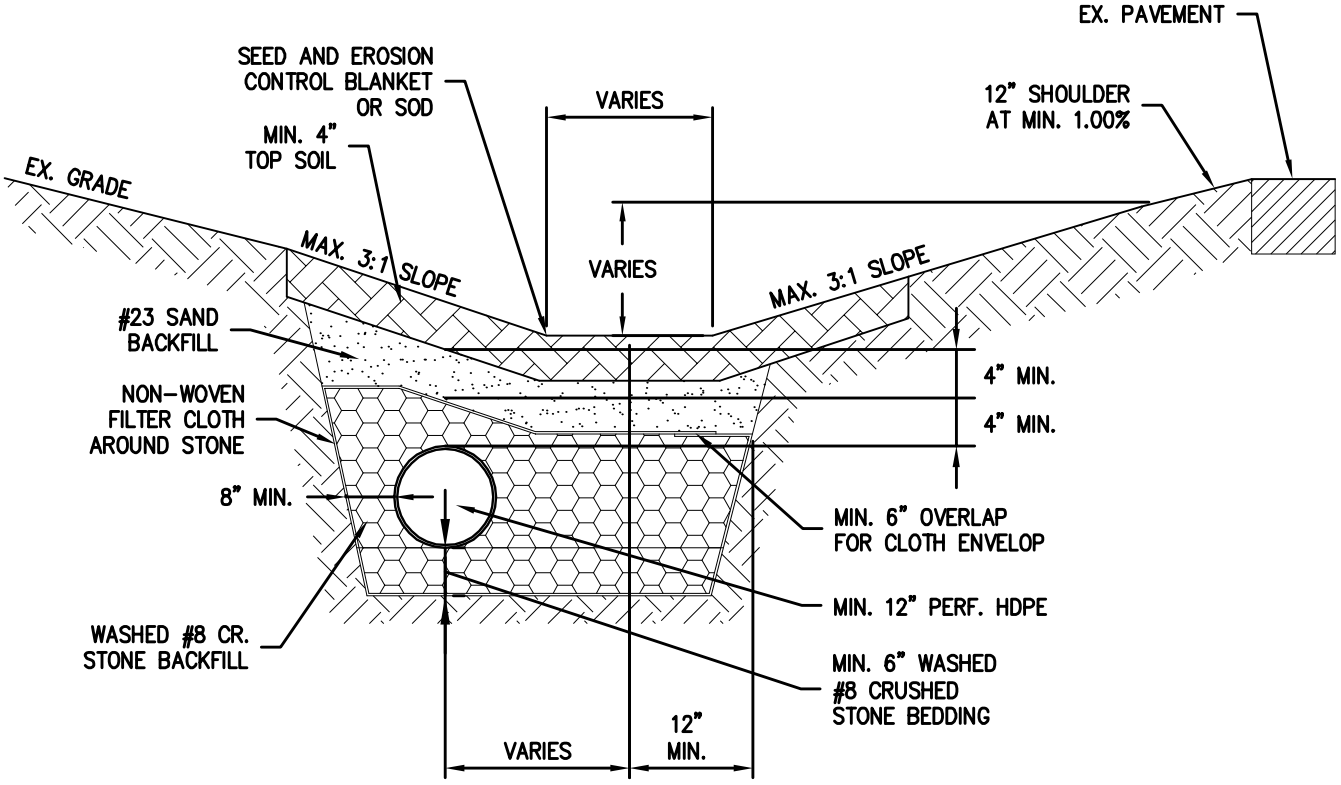

NOTES:
1. PIPE OFFSET FROM DITCH CENTERLINE FOR COVER.

MODIFIED HYBRID DITCH TRENCH

NO SCALE

DETAIL NO. SW-05
REVISION DATE: MAY 2013

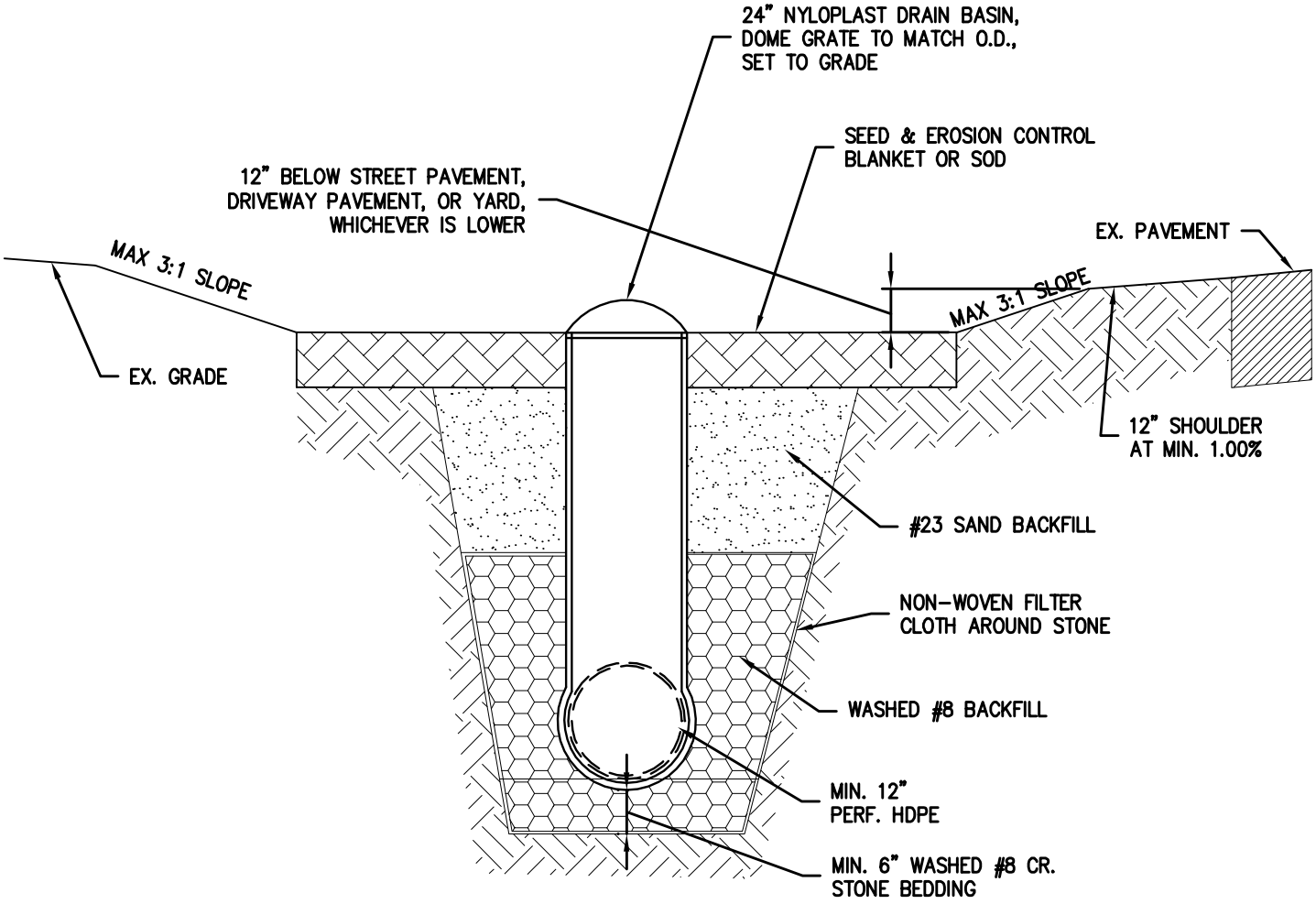

NOTES:

1. NYLOPLAST DRAIN BASIN CASTINGS SHALL BE SUPPLIED BY STRUCTURE MANUFACTURER. ALL CASTINGS SHALL BE CLEARLY AND PERMANENTLY MARKED, STENCILED, OR EMBOSSED WITH A POLLUTION PREVENTION MESSAGE AND ICON. THE CASTING SHALL HAVE THE MESSAGE "DUMP NO WASTE <FISH ICON> DRAINS TO WATERWAY" IN MINIMUM 1 INCH HIGH LETTERS.

HYBRID DITCH TRENCH AT INLET

NO SCALE

DETAIL NO. SW-06
REVISION DATE: MAY 2013

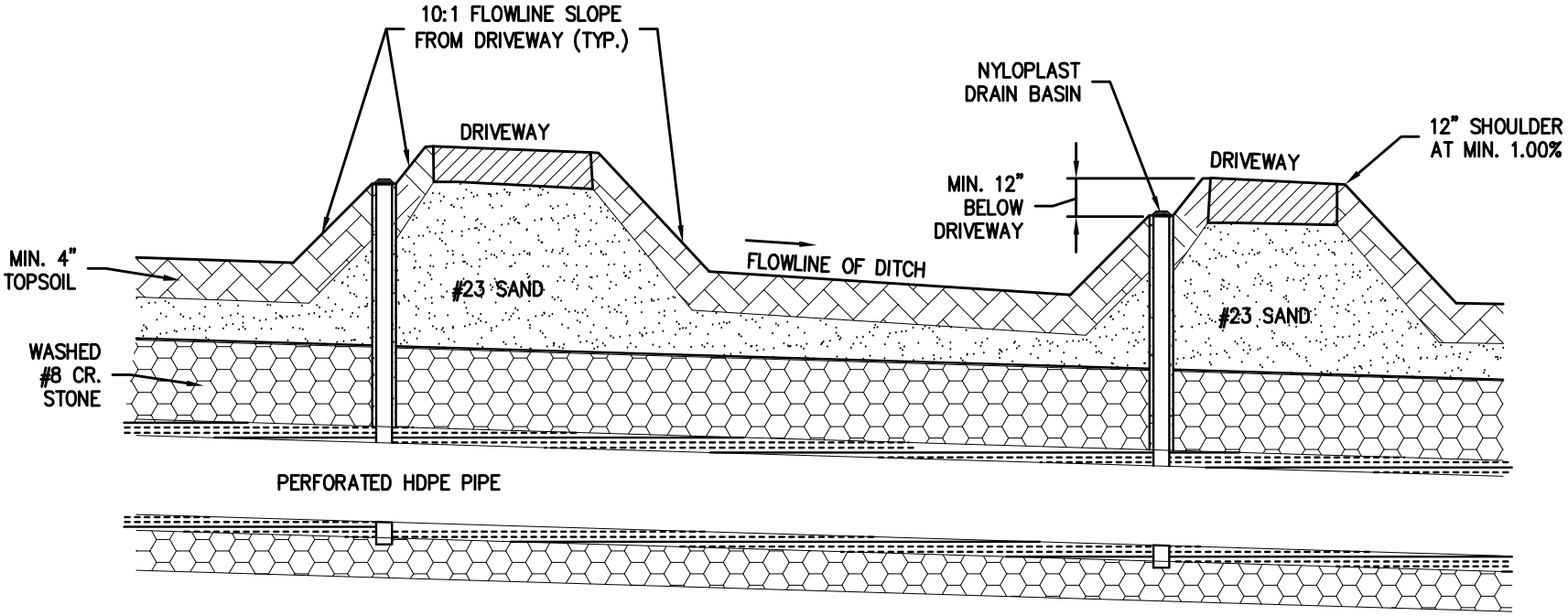

HYBRID DITCH PROFILE

NO SCALE

DETAIL NO. SW-07
REVISION DATE: MAY 2013

PIPE DIA.	END SECT. THICK.	DIMENSIONS					SLOPE APPX.	BODY
		A (1"±)	B (MAX)	H (1"±)	L (1½"±)	W (2"±)		
12"	.064"	6"	6"	6"	21"	24"	2½:1	1 PC.
15"	.064"	7"	8"	6"	26"	30"	2½:1	1 PC.
18"	.064"	8"	10"	6"	31"	36"	2½:1	1 PC.
21"	.064"	9"	12"	6"	36"	42"	2½:1	1 PC.
24"	.064"	10"	13"	6"	41"	48"	2½:1	1 PC.
30"	.079"	12"	16"	8"	51"	60"	2½:1	1 PC.
36"	.079"	14"	19"	9"	60"	72"	2½:1	2 PC.

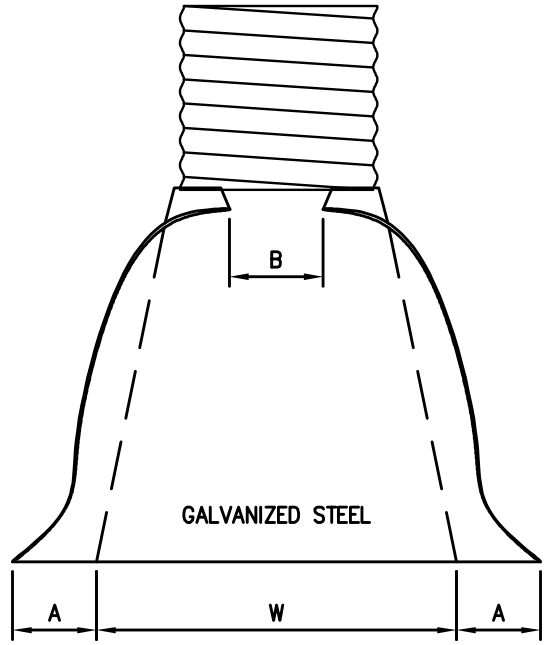

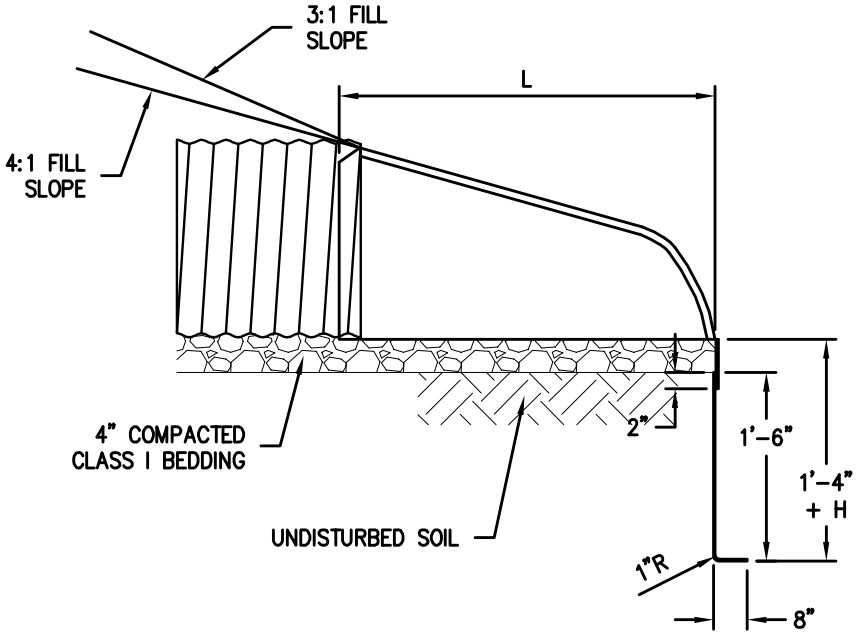

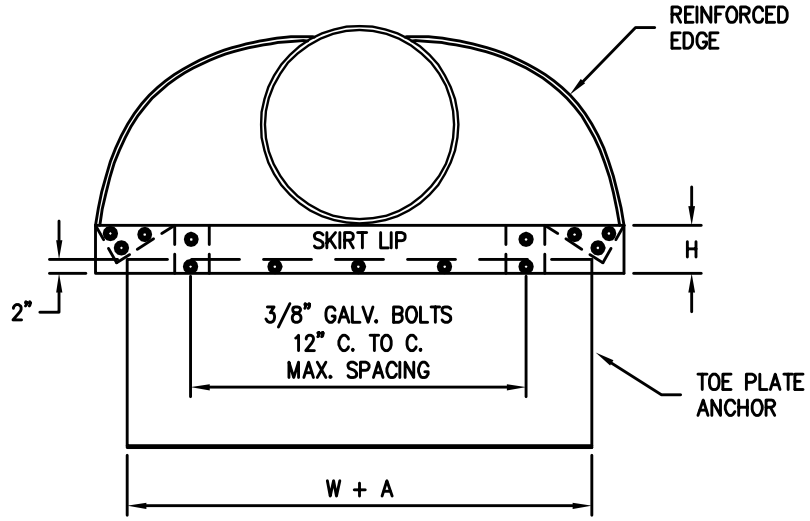

METAL PIPE END SECTION

NO SCALE

DETAIL NO. SW-08
REVISION DATE: MAY 2013

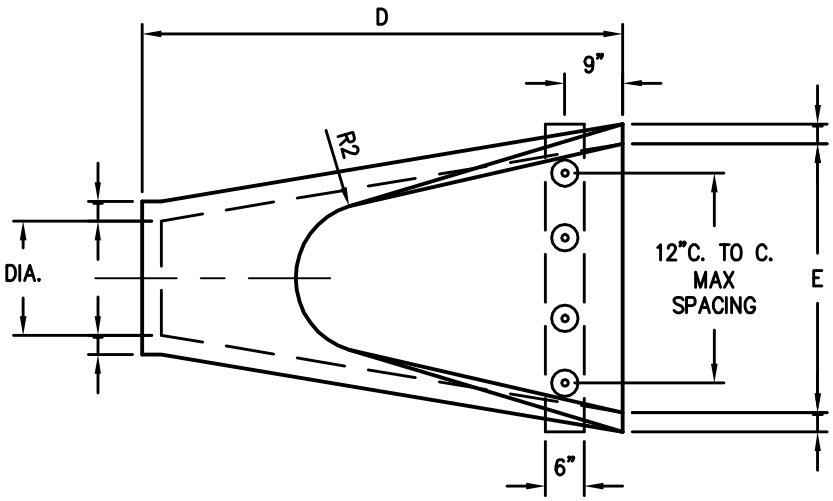

PLAN VIEW

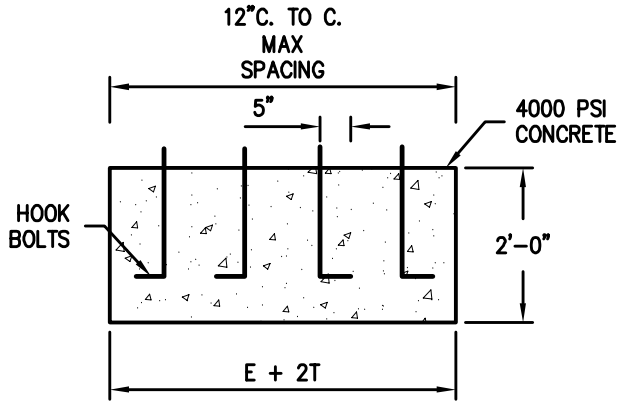

SECTION A-A
CONCRETE PIPE TOE ANCHOR

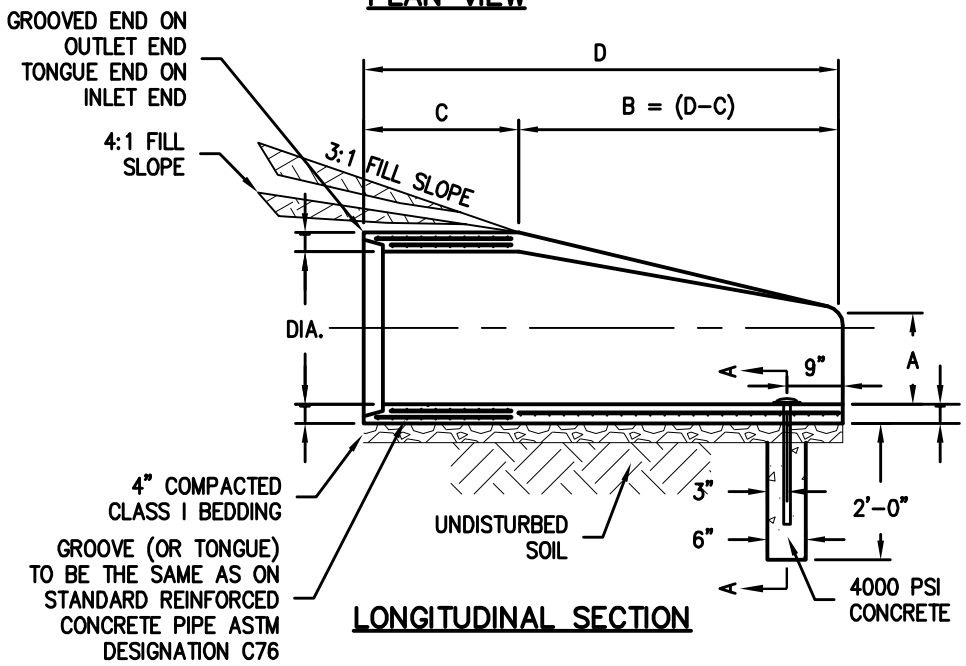

LONGITUDINAL SECTION

DIA.	T (MIN.)	A*	C*	D*	E*	R_1	R_2	APPROX. WEIGHT
12"	2"	5"	51"	74"	24"	10.125"	9"	800
15"	2.25"	7"	48"	75"	30"	12.5"	11"	1100
18"	2.5"	11"	49"	74"	36"	15.5"	12"	1300
21"	2.75"	11"	42"	75"	42"	16.125"	13"	1500
24"	3"	12"	32"	75"	48"	16.375"	14"	1800
27"	3.25"	13"	29"	75"	54"	18.563"	14.5"	2100
30"	3.5"	14"	22"	75"	60"	18.5"	15"	2400
33"	3.75"	15"	42"	99"	66"	23.75"	17.5"	4100
36"	4"	17"	37"	99"	72"	24.625"	20"	4200
* TOLERANCE ±								

PRECAST CONCRETE END SECTION

NO SCALE

DETAIL NO. SW-09
REVISION DATE: MAY 2013

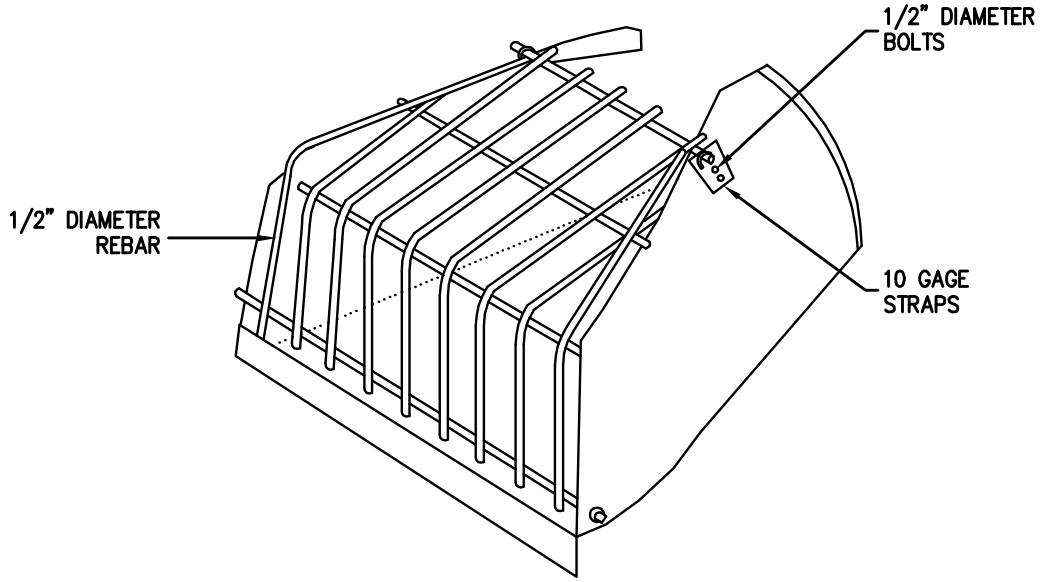

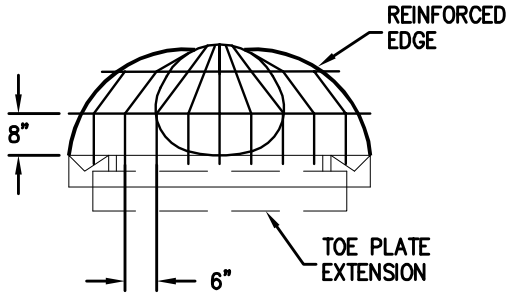

ELEVATION

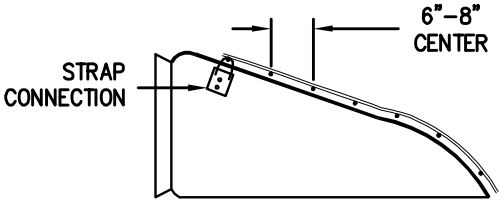

CROSS SECTION

NOTES:

1. TRASH RACK BARS TO BE BLACK STEEL.
2. PAINT WITH HIGH ZINC COATING AFTER FABRICATION.
3. PLANT FIT TRASH RACK CONFIGURATION.
4. BOLT THROUGH BOTTOM SECTION WITH NUT.
5. LAY OPEN ON BOTTOM FOR "HINGE" EFFECT.
6. LAST CROSS BAR THROUGH BOTTOM SECTION.

TRASH GUARD

NO SCALE

DETAIL NO. SW-10
REVISION DATE: MAY 2013

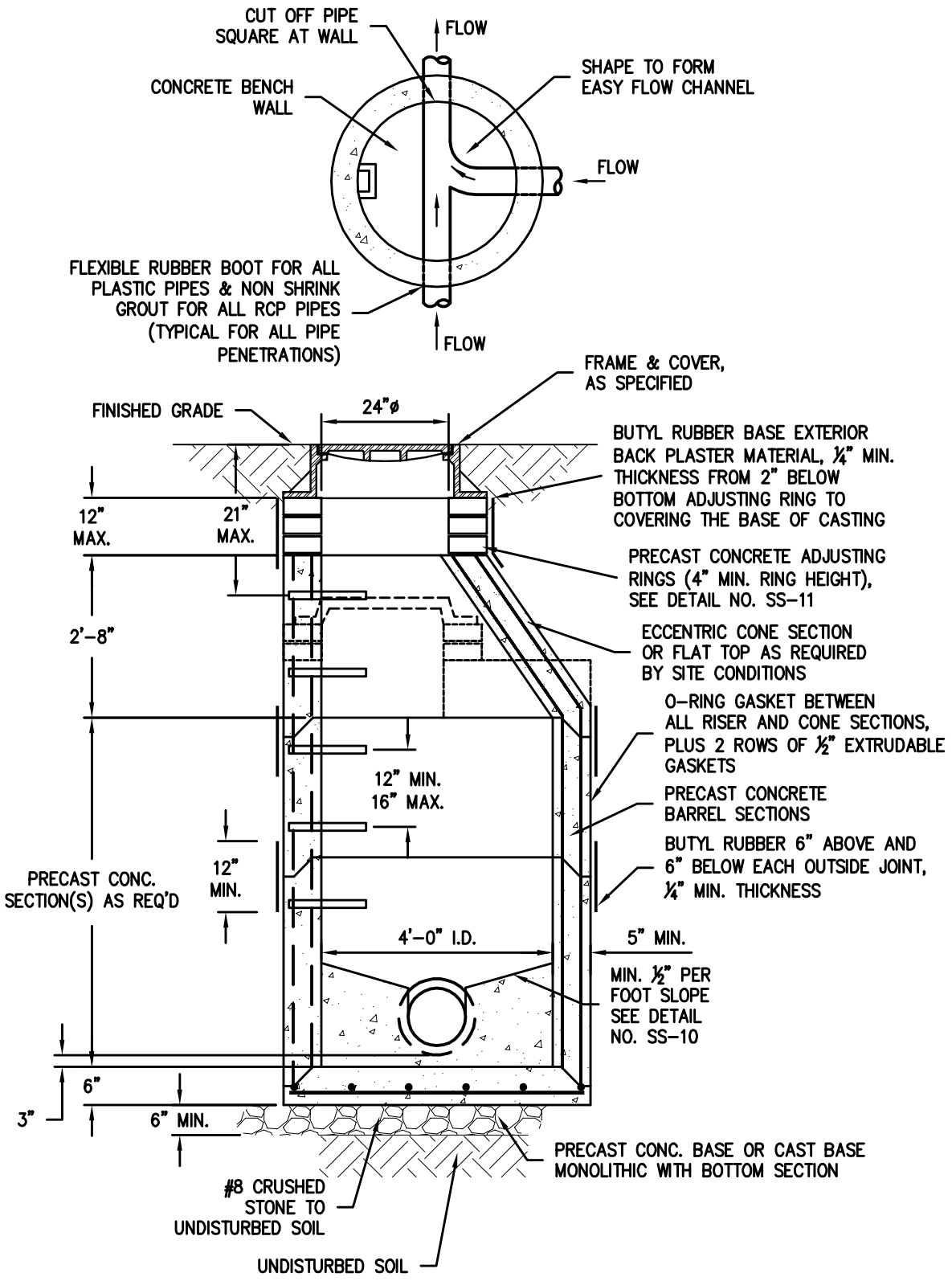

NOTES:

1. PROVIDE GRATE CASTING WITH A POLLUTION PREVENTION MESSAGE AND ICON WHICH ARE PERMANENTLY ATTACHED OR CAST DIRECTLY INTO THE CASTING. THE CASTING SHALL HAVE THE MESSAGE "DUMP NO WASTE <FISH ICON> DRAINS TO WATERWAY" IN MINIMUM 1 INCH HIGH LETTERS.

2. INSTALL CASTING ¼" BELOW FINISHED PAVEMENT ELEVATION.

STANDARD STORM MANHOLE

NO SCALE

DETAIL NO. SW-11
REVISION DATE: MAY 2013

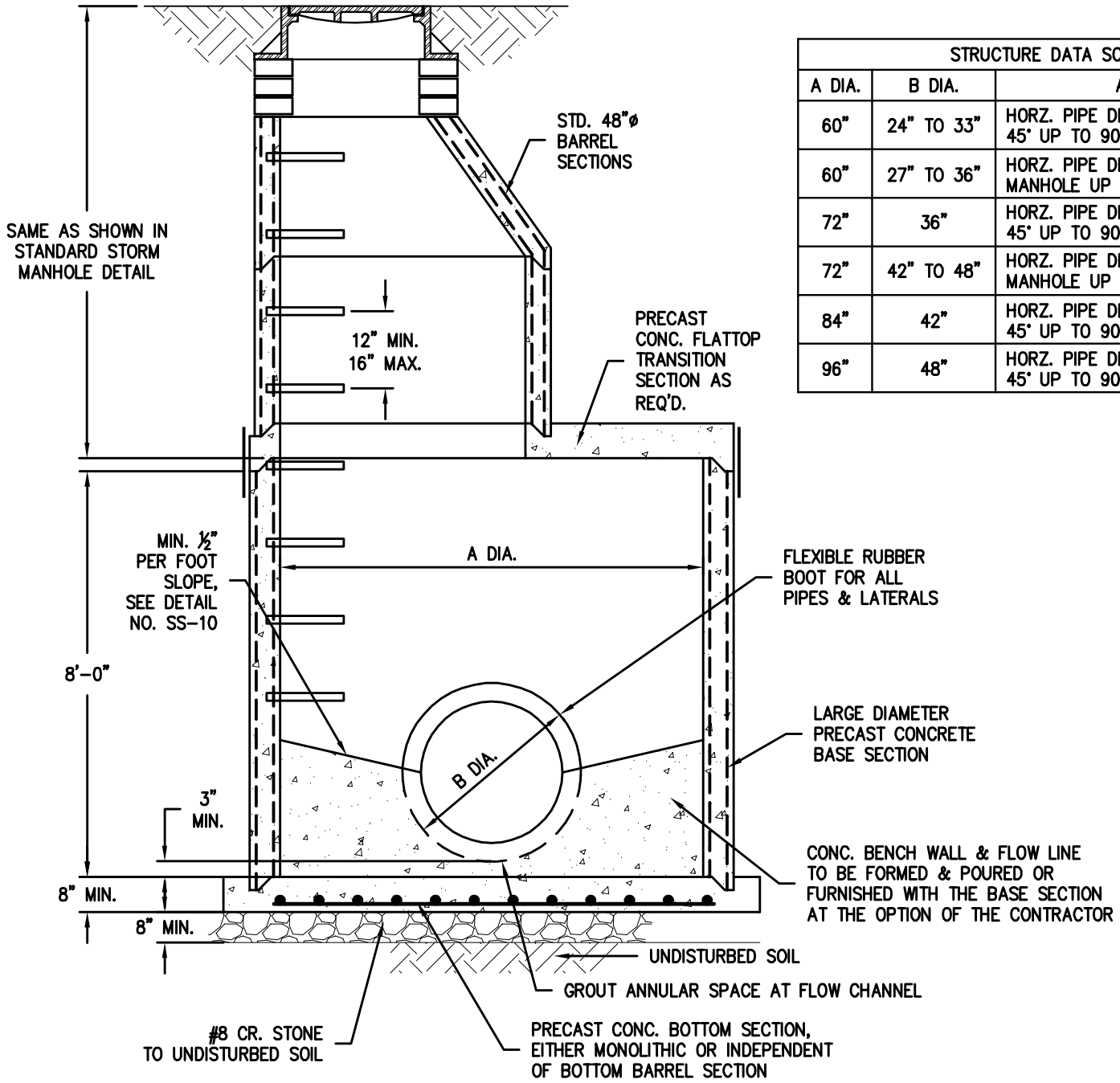

STRUCTURE DATA SCHEDULE		
A DIA.	B DIA.	APPLICATION
60"	24" TO 33"	HORZ. PIPE DEFLECTION GREATER THAN 45° UP TO 90°
60"	27" TO 36"	HORZ. PIPE DEFLECTION STRAIGHT THRU MANHOLE UP TO 45°
72"	36"	HORZ. PIPE DEFLECTION GREATER THAN 45° UP TO 90°
72"	42" TO 48"	HORZ. PIPE DEFLECTION STRAIGHT THRU MANHOLE UP TO 45°
84"	42"	HORZ. PIPE DEFLECTION GREATER THAN 45° UP TO 90°
96"	48"	HORZ. PIPE DEFLECTION GREATER THAN 45° UP TO 90°

TYPE 1 STORM MANHOLE

NO SCALE

DETAIL NO. SW-12
REVISION DATE: MAY 2013

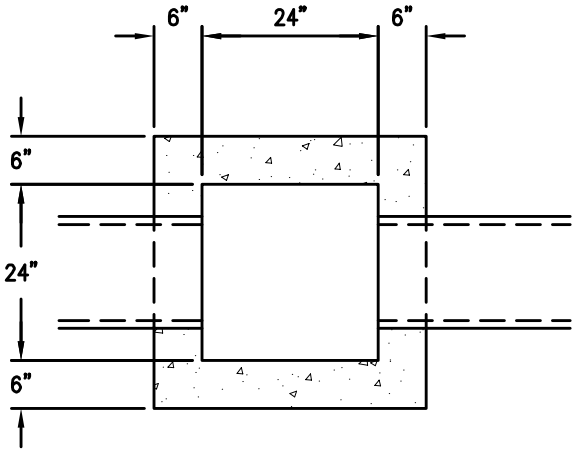

PLAN VIEW

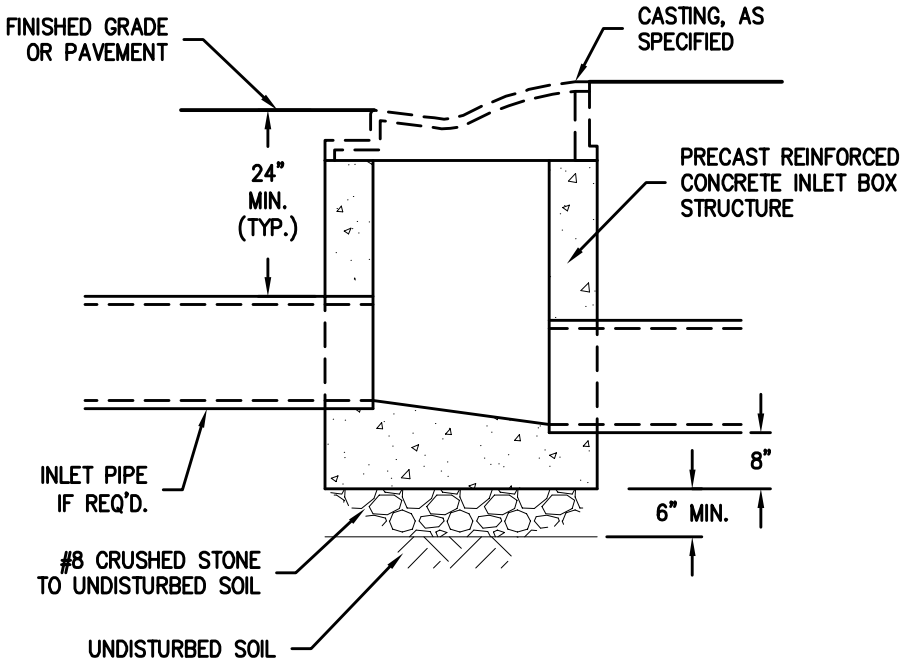

ELEVATION VIEW

NOTES:

1. PROVIDE GRATE CASTING WITH A POLLUTION PREVENTION MESSAGE AND ICON WHICH ARE PERMANENTLY ATTACHED OR CAST DIRECTLY INTO THE CASTING. THE CASTING SHALL HAVE THE MESSAGE "DUMP NO WASTE <FISH ICON> DRAINS TO WATERWAY" IN MINIMUM 1 INCH HIGH LETTERS.

2. INSTALL CASTING ¼" BELOW FINISHED PAVEMENT ELEVATION.

INLET TYPE A

NO SCALE

DETAIL NO. SW-13
REVISION DATE: MAY 2013

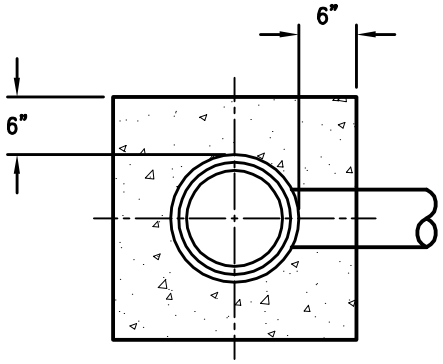

PLAN VIEW

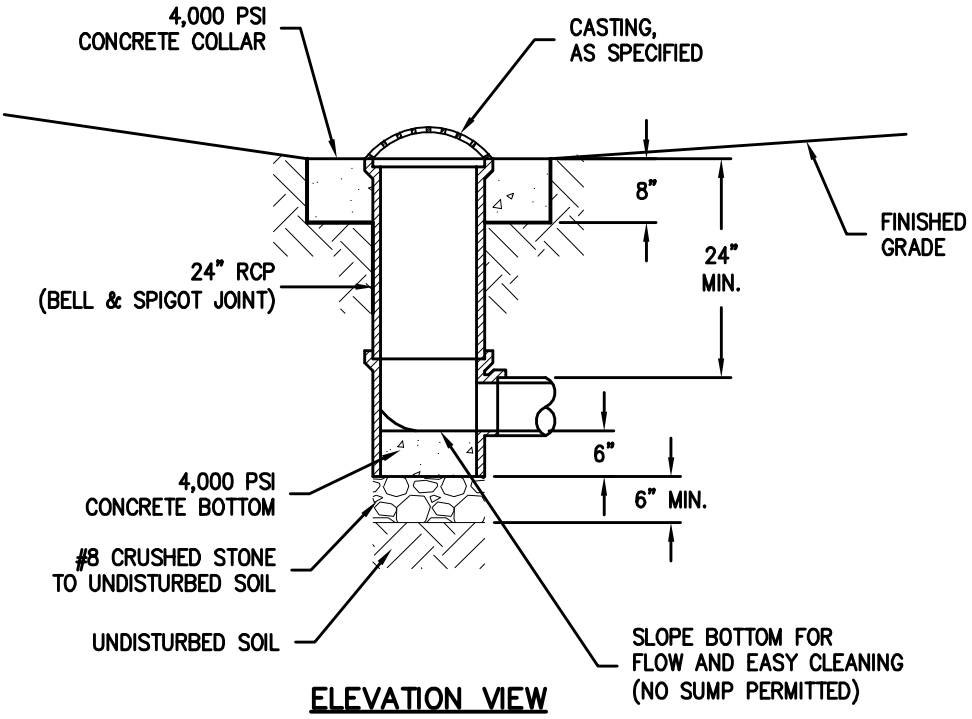

ELEVATION VIEW

NOTES:

1. YARD INLET ONLY TO BE USED IN YARD OR SWALE LOCATIONS. YARD INLET IS NOT PERMITTED IN TRAFFIC LOCATIONS.

2. PROVIDE GRATE CASTING WITH A POLLUTION PREVENTION MESSAGE AND ICON WHICH ARE PERMANENTLY ATTACHED OR CAST DIRECTLY INTO THE CASTING. THE CASTING SHALL HAVE THE MESSAGE "DUMP NO WASTE <FISH ICON> DRAINS TO WATERWAY" IN MINIMUM 1 INCH HIGH LETTERS.

YARD INLET

NO SCALE

DETAIL NO. SW-14
REVISION DATE: MAY 2013

CONSTRUCTION DETAILS

SS - SANITARY SEWER SYSTEMS

TABLE OF CONTENTS

Sanitary Lateral for Shallow Sewers (Less than 15' Deep) SS-01
Sanitary Lateral for Deep Sewers (15' Deep and Over) SS-02
Type 1 Cleanout SS-03
Type 2 Cleanout SS-04
Type 3 Cleanout SS-05
New Service Connection to Existing Sanitary Sewer SS-06
Standard Sanitary Manhole SS-07
Shallow Sanitary Manhole SS-08
Type 1 Sanitary Manhole SS-09
Standard Manhole Benches SS-10
Precast Concrete Adjusting Ring SS-11
Sanitary Manhole over Existing Sanitary Sewer SS-12
Inside Drop Sanitary Manhole SS-13
Outside Drop Sanitary Manhole SS-14
Existing Manhole Connection SS-15

TOWN OF Brownsburg

MAY 2013

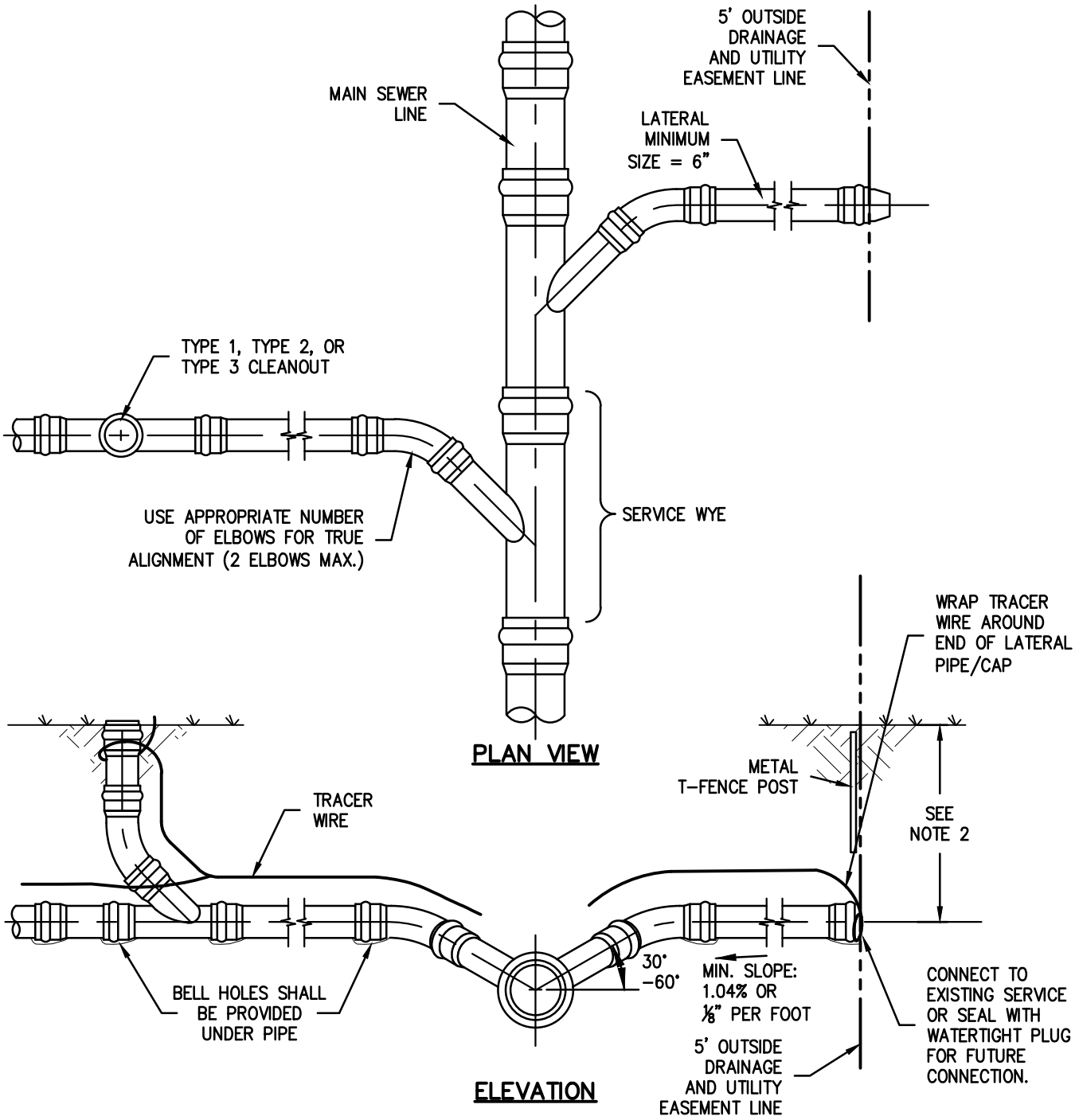

NOTES:

1. WYE BRANCHES SHALL BE INSTALLED WHERE INDICATED. THEY SHALL BE EXTENDED TO PROPERTY LINES OR TO DISTANCES AS SHOWN ON THE DRAWINGS, AND SHALL BE OF 6" PIPE UNLESS OTHERWISE SHOWN.
2. THE DEPTH OF THE LATERAL SHALL BE APPROXIMATELY 5'-0" UNLESS SEWER DEPTH IS LESS, IN WHICH EVENT A MINIMUM SLOPE OF 1/8" PER 1'-0" SHALL BE USED. THE DEPTH OF THE LATERAL SHALL BE NO LESS THAN 4'-0".
3. COMPACTION OF BEDDING AND BACKFILL IS CRITICAL UNDER WYE AND BEND. IF PROPER COMPACTION CANNOT BE ACHIEVED, PLACE A MIN. OF 6" OF CLASS B CONCRETE AROUND ⅛ BEND.

SANITARY LATERAL FOR SHALLOW SEWERS (LESS THAN 15' DEEP)

NO SCALE

DETAIL NO. SS-01
REVISION DATE: MAY 2013

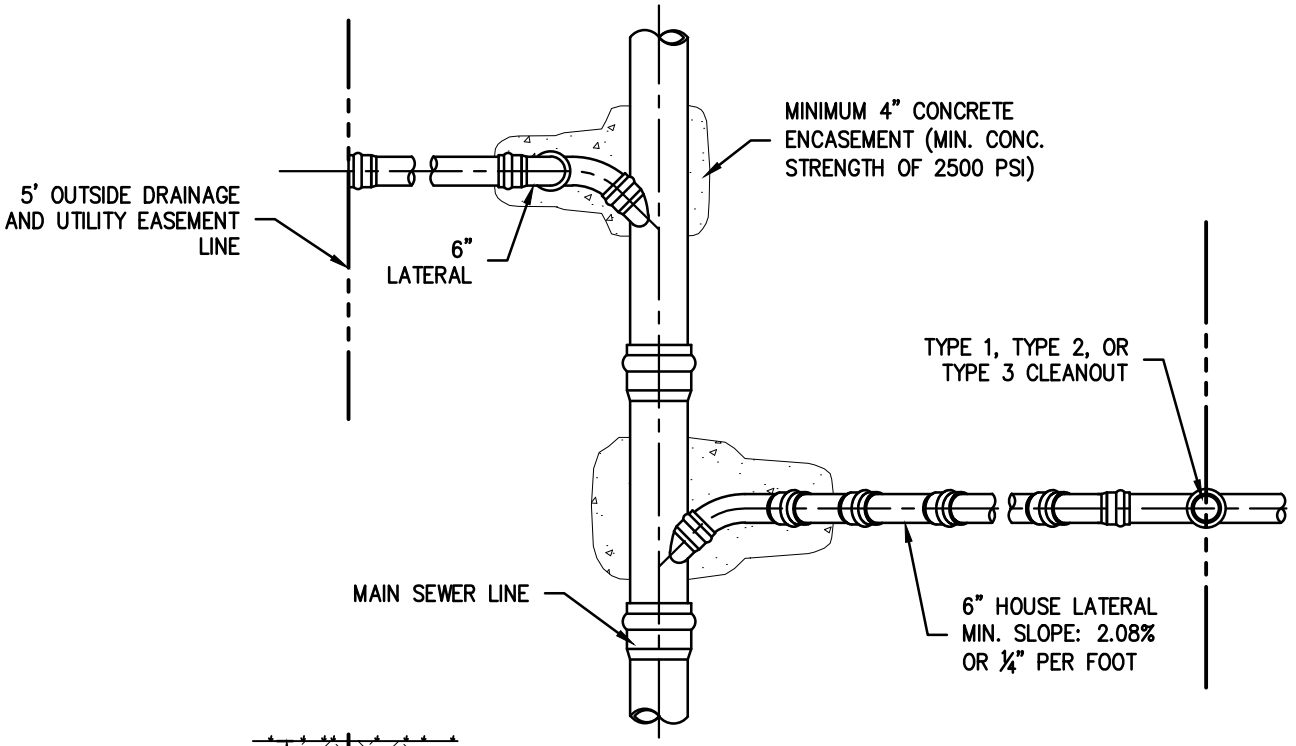

PLAN

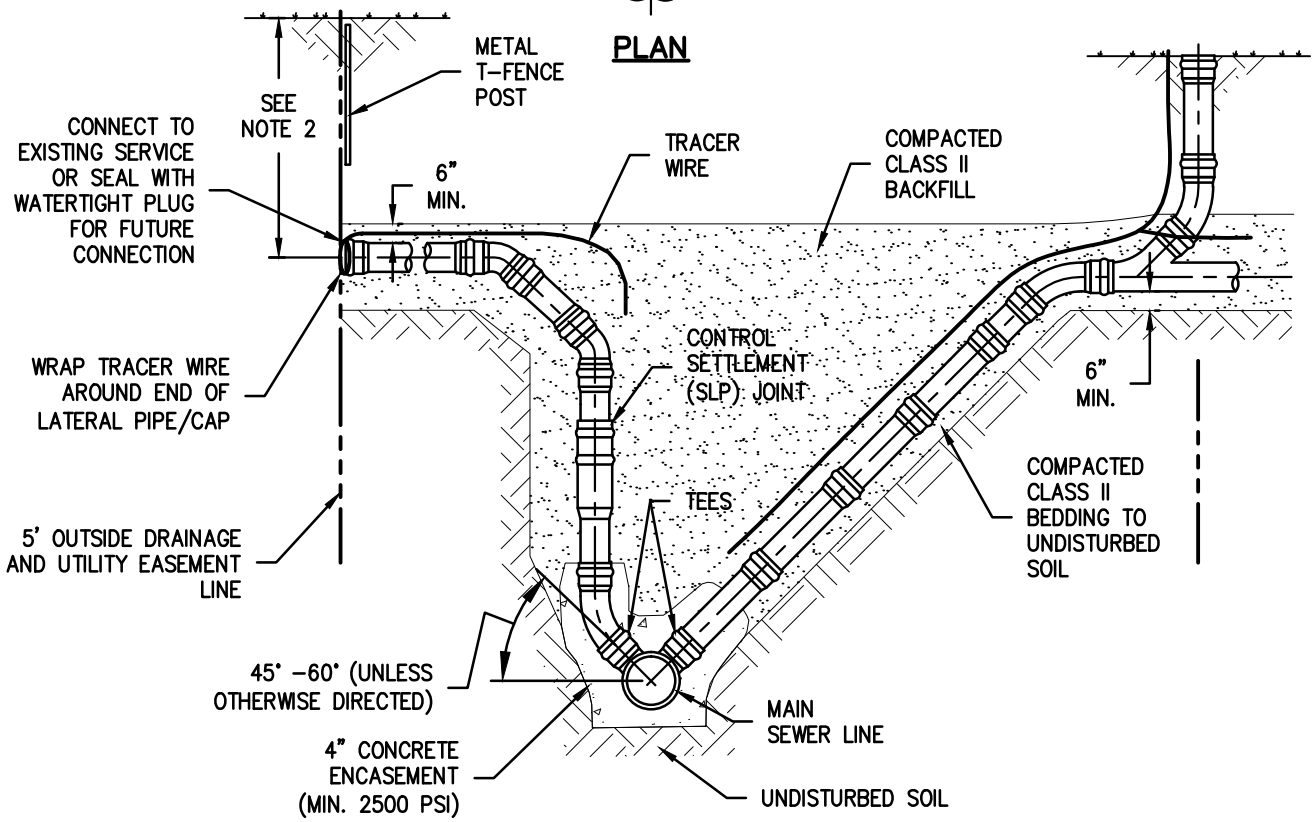

ELEVATION

NOTES:

1. WYE BRANCHES SHALL BE INSTALLED WHERE INDICATED. THEY SHALL BE EXTENDED TO PROPERTY LINES OR TO DISTANCES AS SHOWN ON THE DRAWINGS, AND SHALL BE OF 6" PIPE UNLESS OTHERWISE SHOWN.

2. THE DEPTH OF THE LATERAL SHALL BE APPROXIMATELY 5'-0".

SANITARY LATERAL FOR DEEP SEWERS (15' DEEP AND OVER)

NO SCALE

DETAIL NO. SS-02
REVISION DATE: MAY 2013

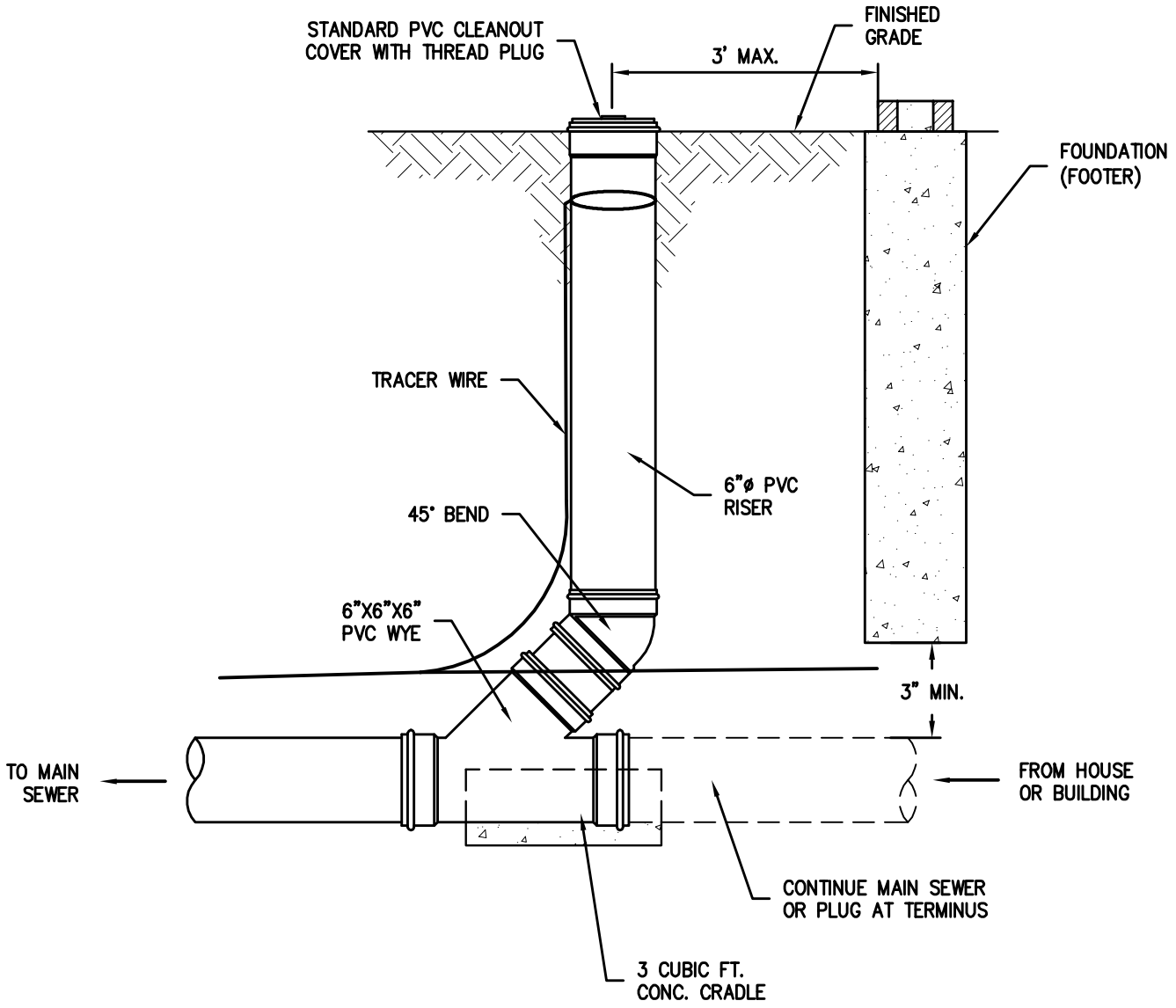

NOTES:
1. FOR USE IN LAWN OR LANDSCAPED SURFACES (LESS THAN 3' FROM HOUSE OR BUILDING).

TYPE 1 CLEANOUT

NO SCALE

DETAIL NO. SS-03
REVISION DATE: MAY 2013

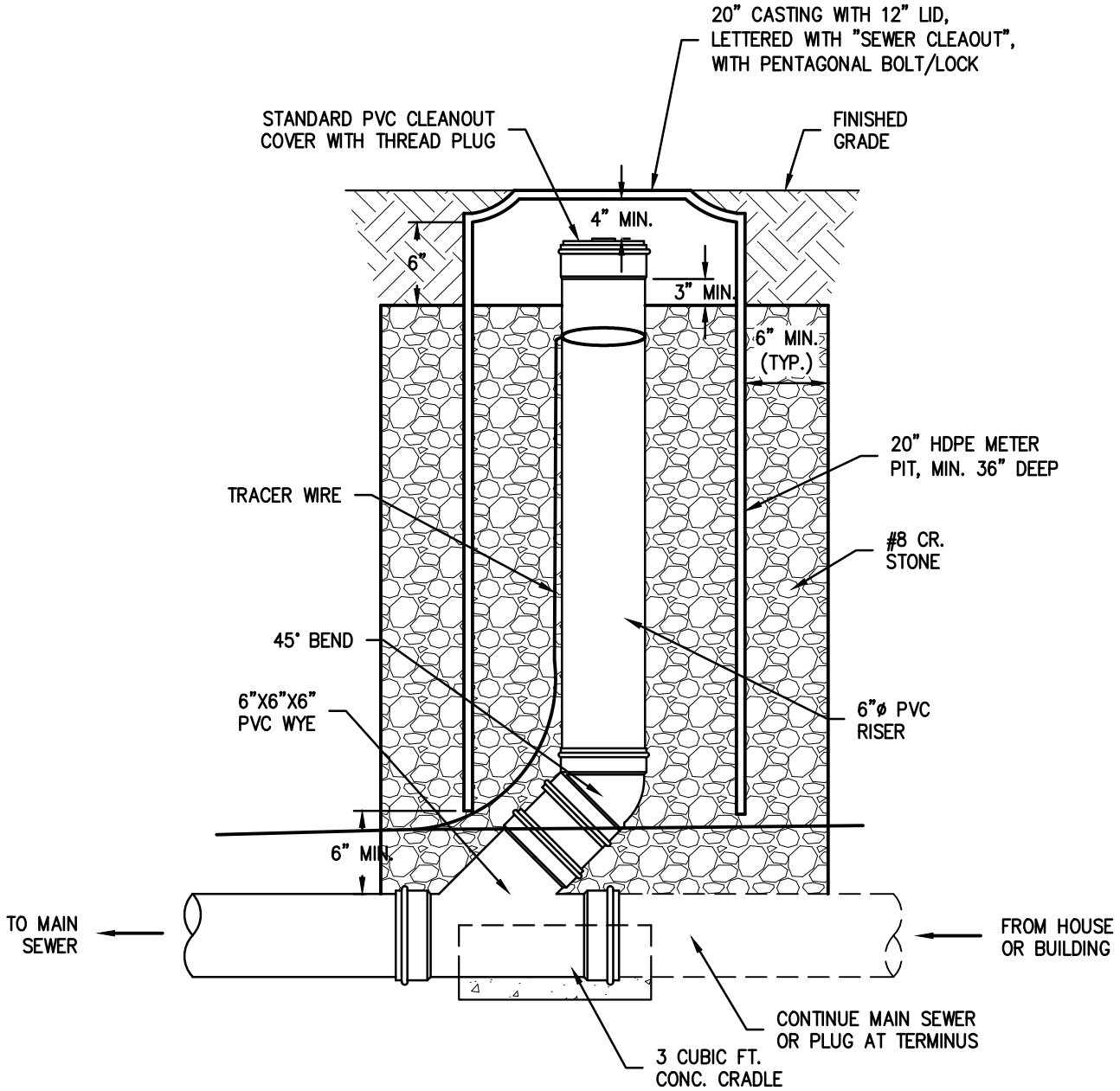

NOTES:

1. FOR USE IN LAWN OR LANDSCAPED SURFACES (GREATER THAN 3' FROM HOUSE OR BUILDING).
2. CASTING SHALL BE INSTALLED SO THAT IT DOES NOT CONTACT THE CLEANOUT RISER PIPE OR CAP.
3. METER PIT SHALL BE INSTALLED SO THAT IT DOES NOT CONTACT THE LATERAL OR CLEANOUT RISER PIPE.

TYPE 2 CLEANOUT

NO SCALE

DETAIL NO. SS-04
REVISION DATE: MAY 2013

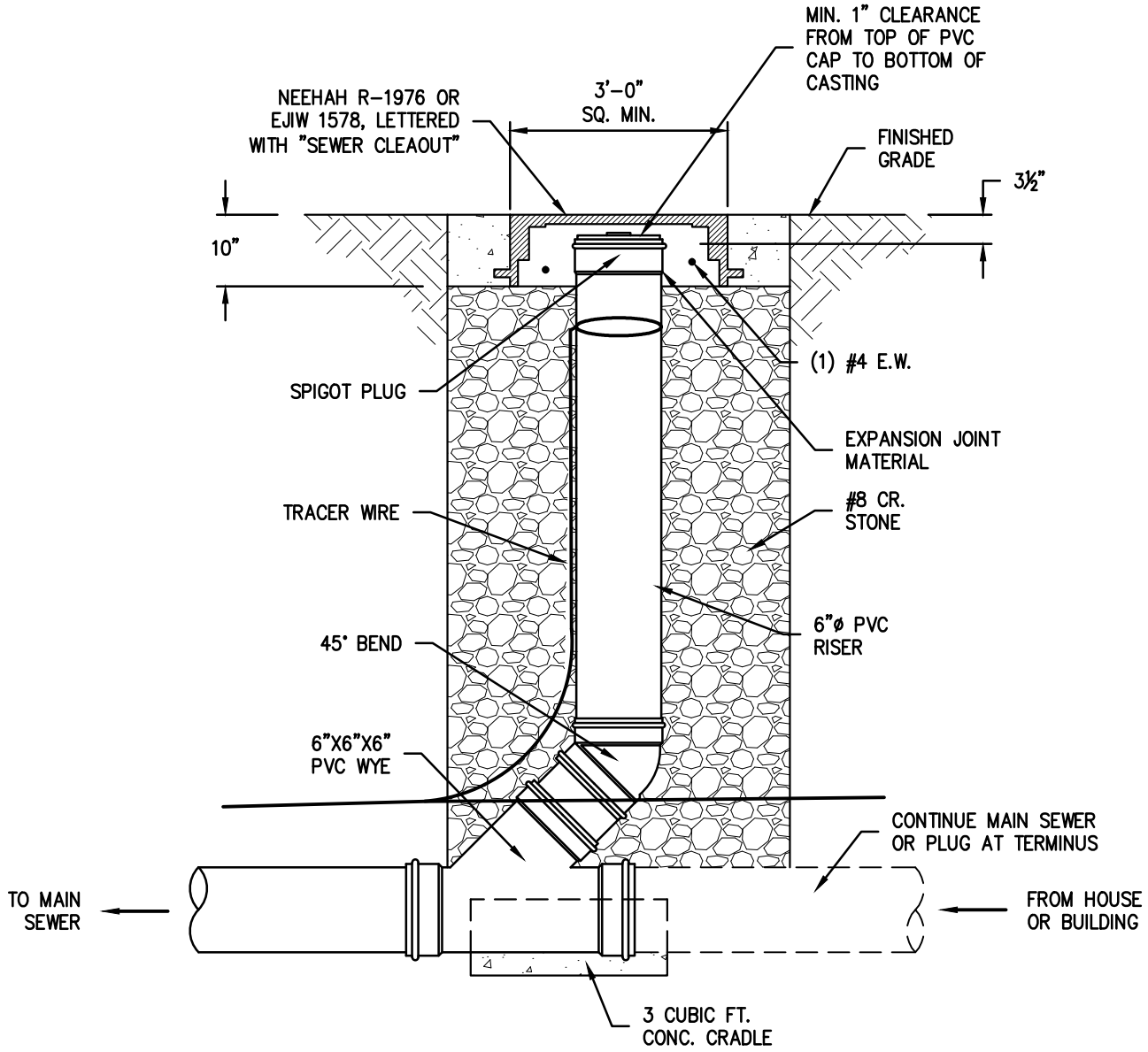

NOTES:

1. FOR USE IN PAVED AREAS.
2. CONCRETE APRON AND CASTING SHALL BE INSTALLED SO THAT THEY DO NOT CONTACT THE CLEANOUT RISER PIPE OR CAP.

TYPE 3 CLEANOUT

NO SCALE

DETAIL NO. SS-05
REVISION DATE: MAY 2013

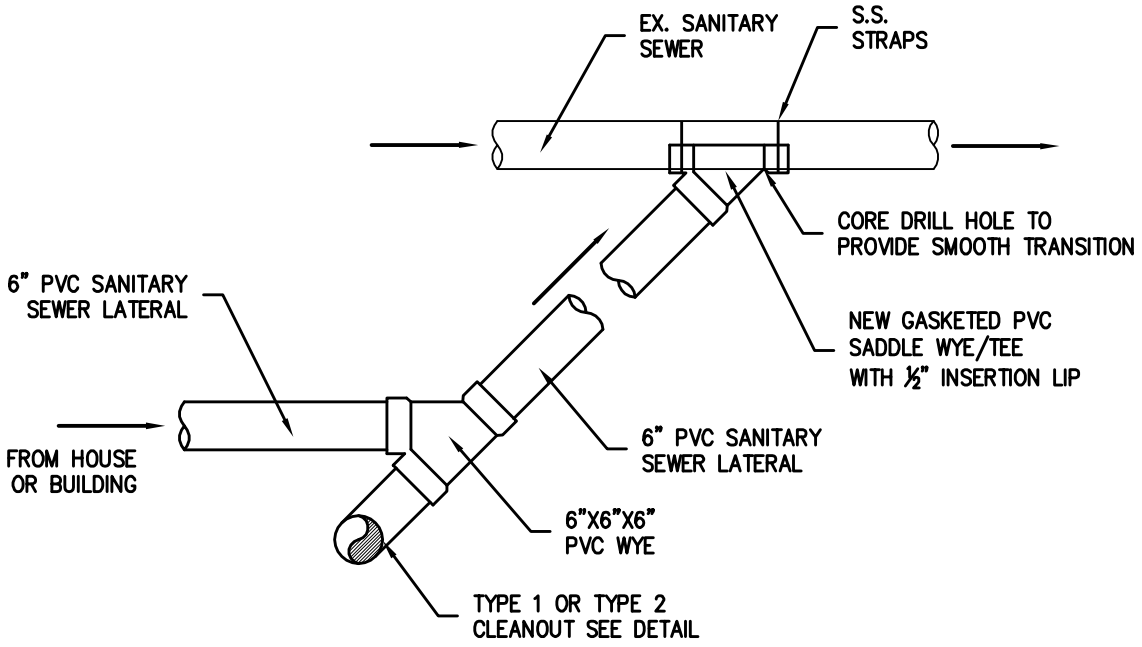

NOTES:
1. NEW CORE DRILL MUST BE A MINIMUM 6" FROM NEAREST PIPE JOINT.

NEW SERVICE CONNECTION TO EXISTING SANITARY SEWER

NO SCALE

DETAIL NO. SS-06
REVISION DATE: MAY 2013

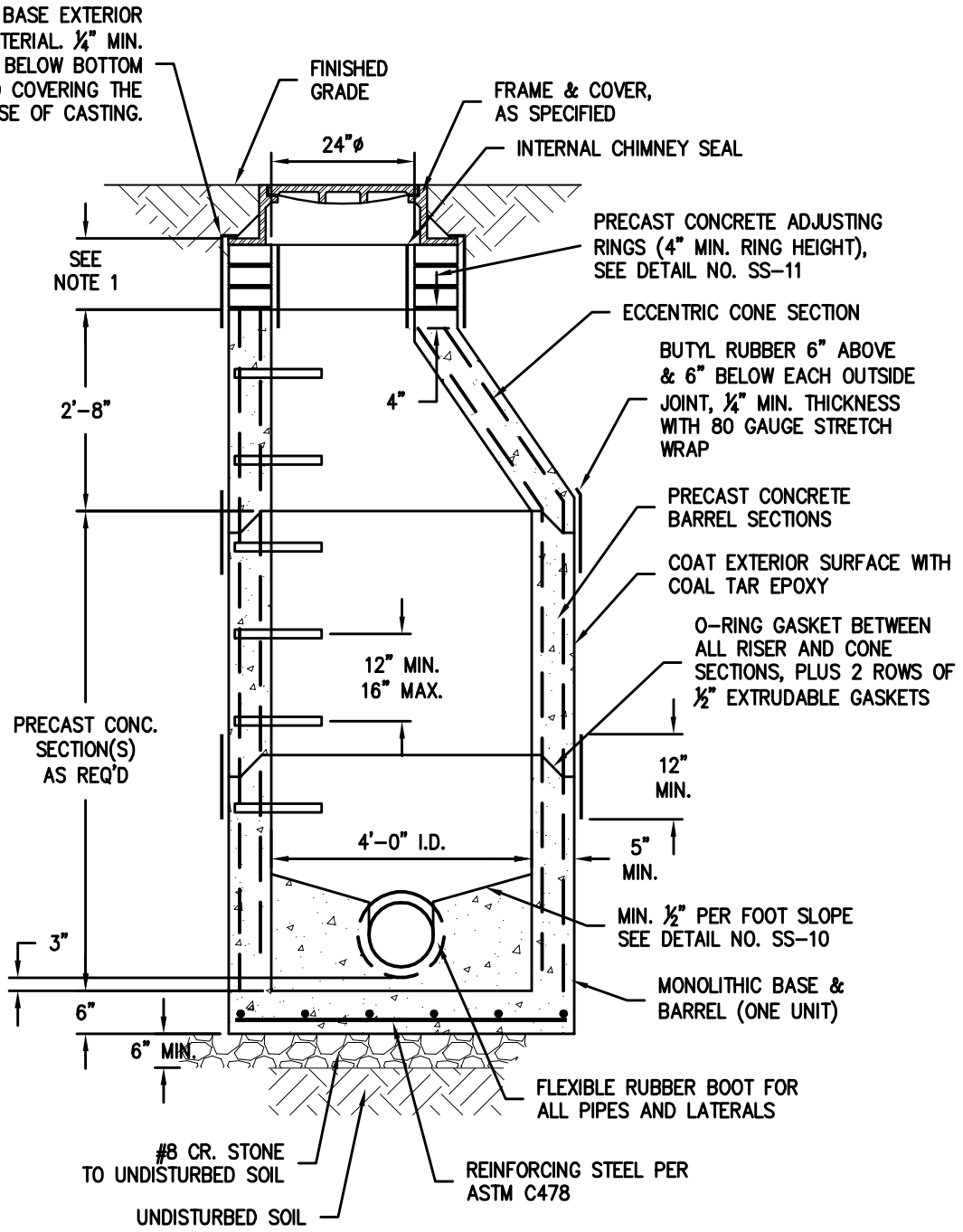

NOTES:

1. FOR NEW CONSTRUCTION 8" MAX. CHIMNEY HEIGHT. FOR EXISTING MANHOLES, 12" MAX. CHIMNEY HEIGHT.

STANDARD SANITARY MANHOLE

NO SCALE

DETAIL NO. SS-07
REVISION DATE: MAY 2013

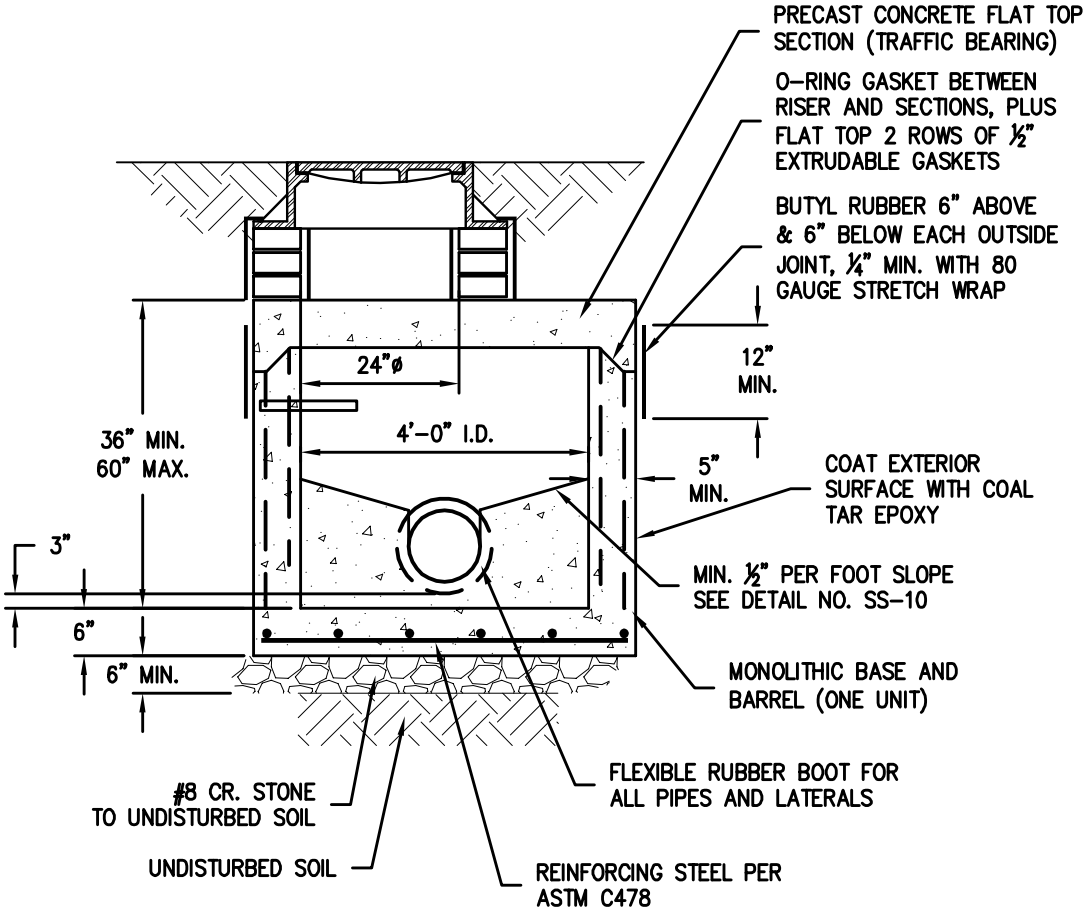

NOTES:

1. REQUIRES PRE-APPROVAL BY TOWN OF BROWNSBURG.
2. NEW MANHOLE CONSTRUCTION AND ACCESSORIES SAME AS SHOWN FOR STANDARD SANITARY MANHOLE.
3. MANHOLE STEPS REQUIRED FOR ALL MANHOLES 4 FEET DEEP OR GREATER.

SHALLOW SANITARY MANHOLE

NO SCALE

DETAIL NO. SS-08
REVISION DATE: MAY 2013

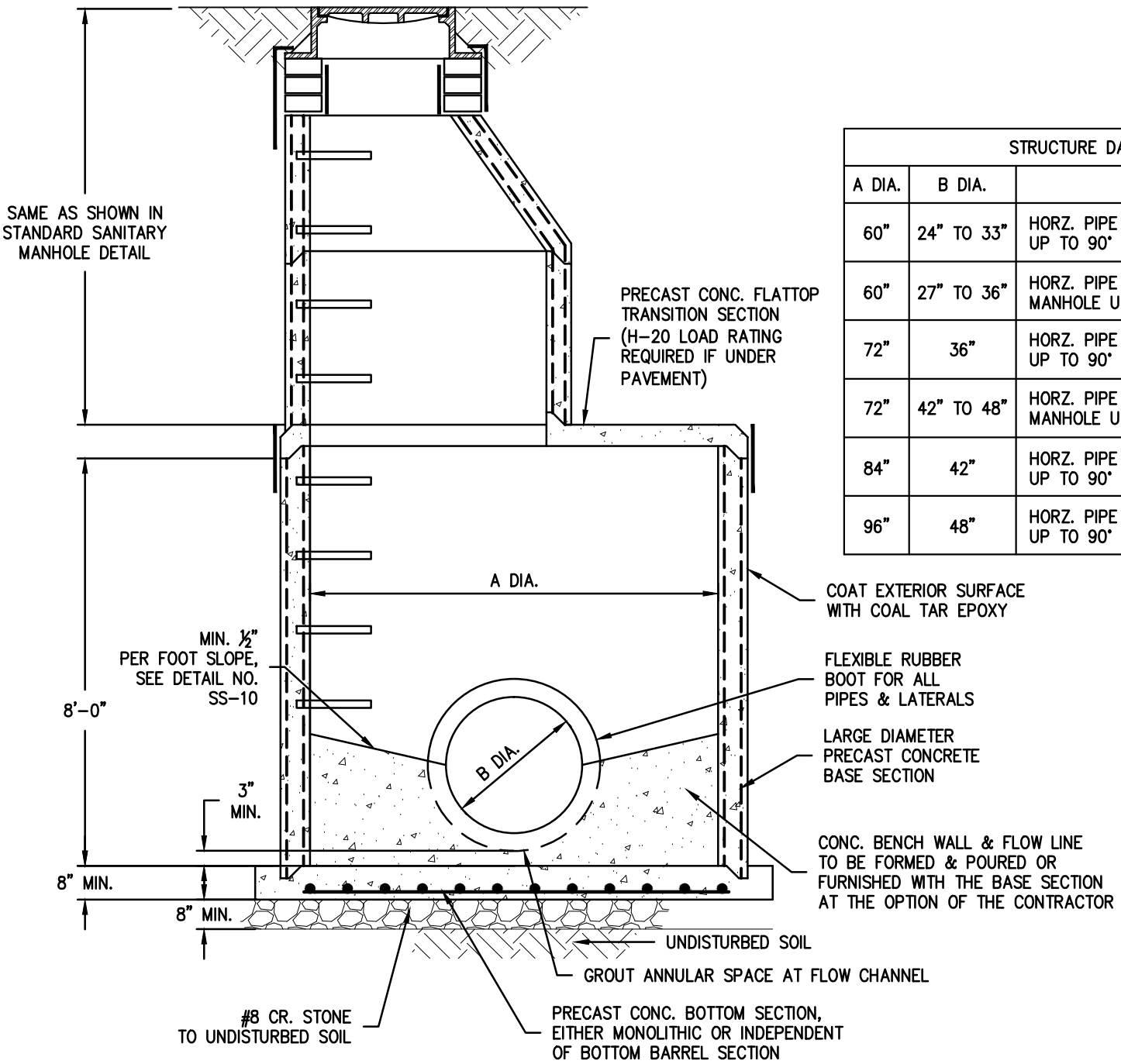

STRUCTURE DATA SCHEDULE		
A DIA.	B DIA.	APPLICATION
60"	24" TO 33"	HORZ. PIPE DEFLECTION GREATER THAN 45° UP TO 90°
60"	27" TO 36"	HORZ. PIPE DEFLECTION STRAIGHT THRU MANHOLE UP TO 45°
72"	36"	HORZ. PIPE DEFLECTION GREATER THAN 45° UP TO 90°
72"	42" TO 48"	HORZ. PIPE DEFLECTION STRAIGHT THRU MANHOLE UP TO 45°
84"	42"	HORZ. PIPE DEFLECTION GREATER THAN 45° UP TO 90°
96"	48"	HORZ. PIPE DEFLECTION GREATER THAN 45° UP TO 90°

TYPE 1 SANITARY MANHOLE

NO SCALE

DETAIL NO. SS-09
REVISION DATE: MAY 2013

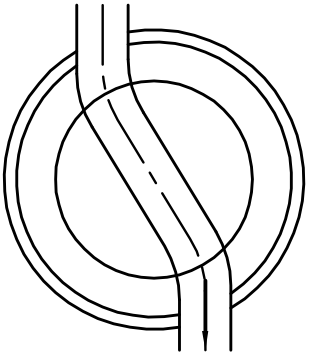

TYPE 1

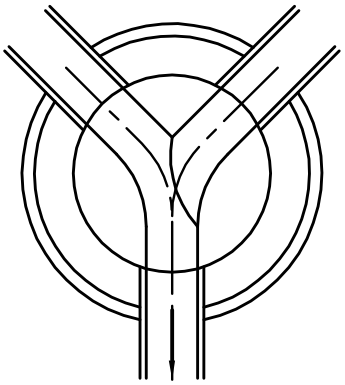

TYPE 2

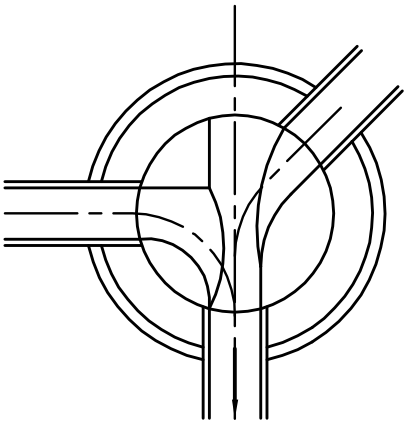

TYPE 3

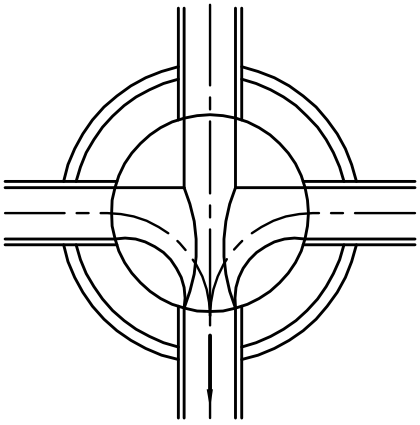

TYPE 4

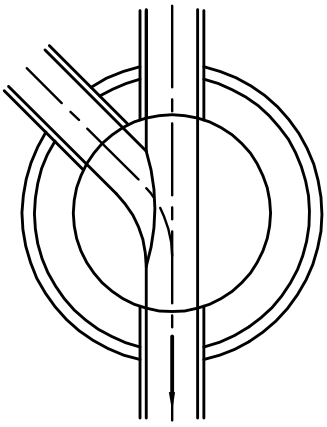

TYPE 5

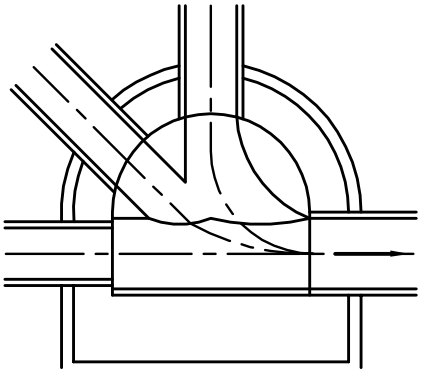

TYPE 6

NOTES:
1. BENCH SLOPE = ½" PER FOOT

STANDARD MANHOLE BENCHES

NO SCALE

DETAIL NO. SS-10
REVISION DATE: MAY 2013

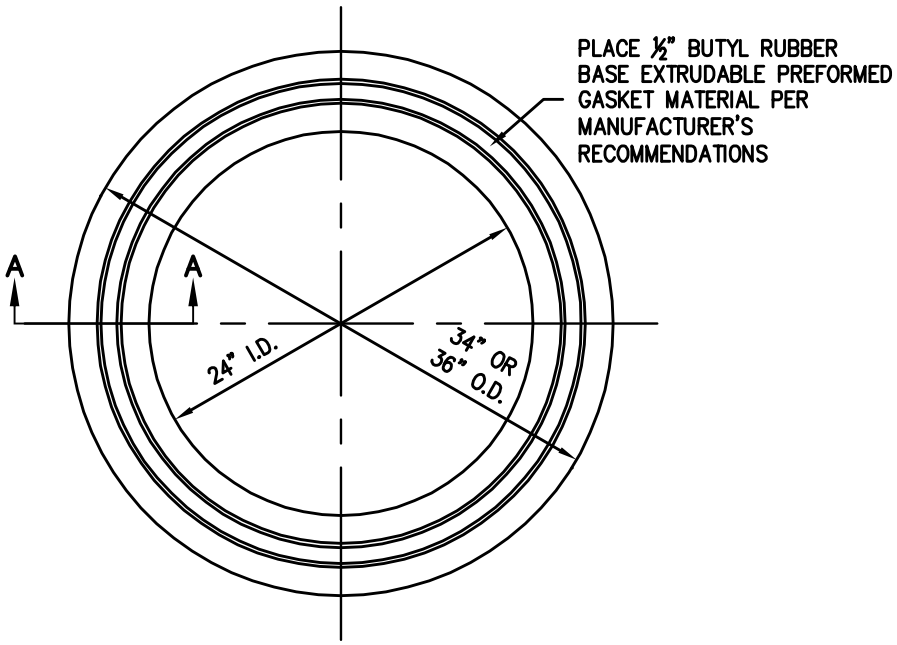

PLAN VIEW

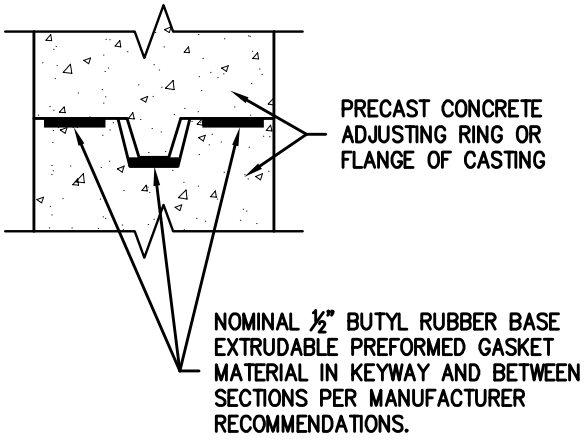

GASKET DETAIL

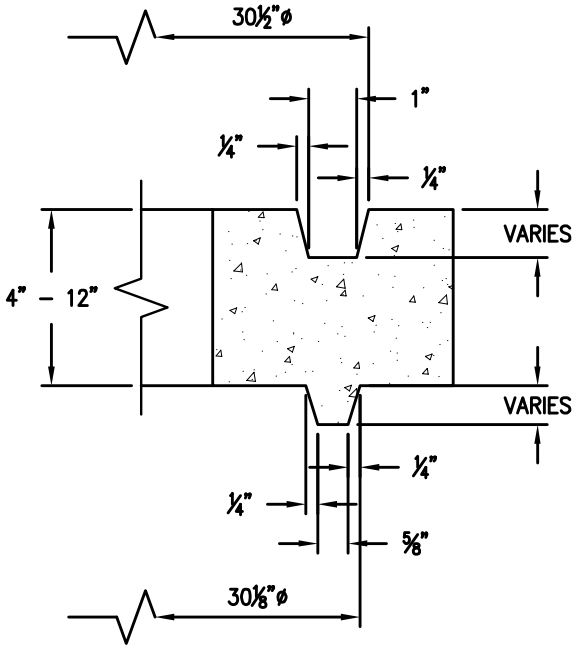

SECTION A–A

NOTES:
1. PRECAST CONCRETE ADJUSTING RINGS SHALL HAVE KEYWAY/CHANNEL CONSTRUCTION. "SMOOTH" ADJUSTING RINGS SHALL NOT BE PERMITTED.

PRECAST CONCRETE ADJUSTING RING

NO SCALE

DETAIL NO. SS-11
REVISION DATE: MAY 2013

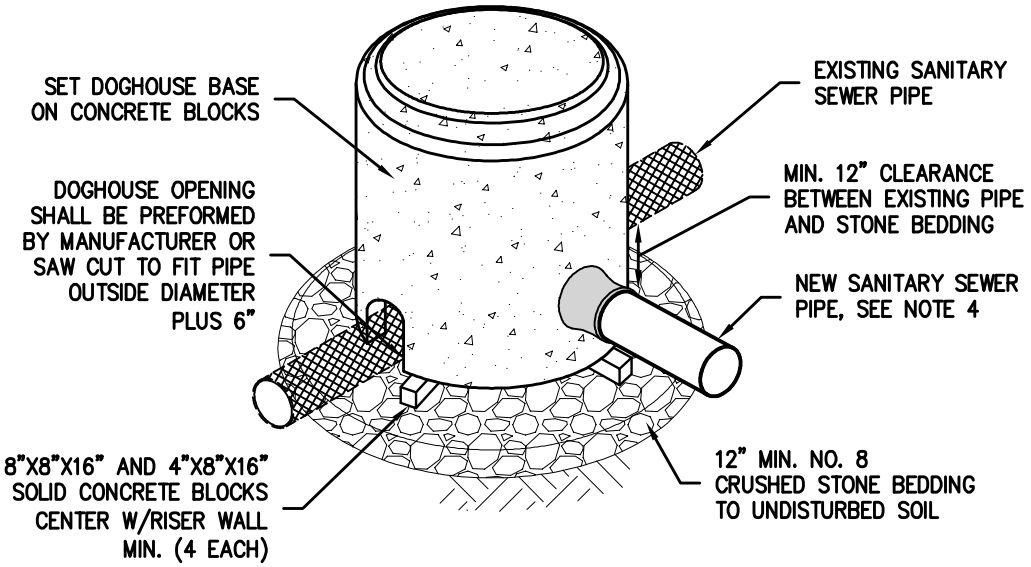

DOGHOUSE MANHOLE BASE

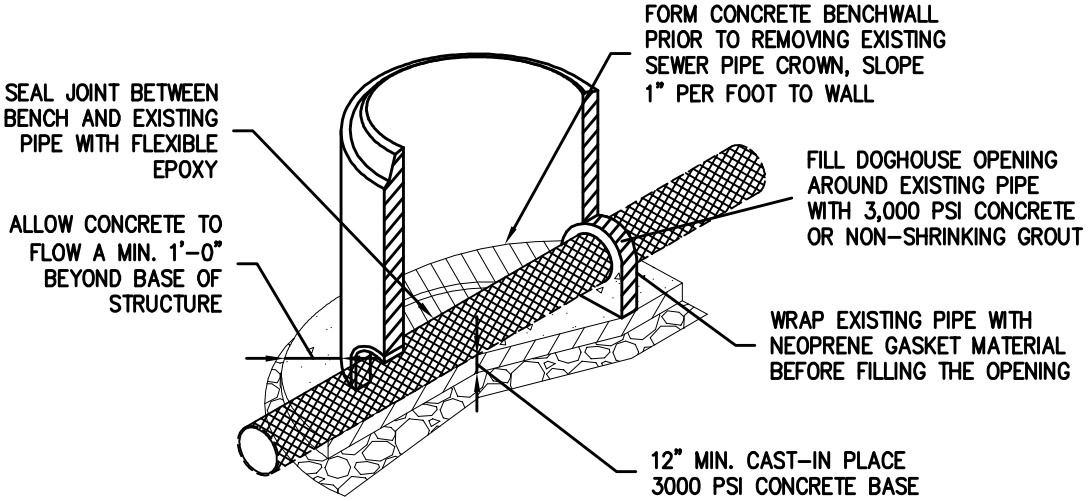

FOUNDATION SECTION VIEW

NOTES:

1. REQUIRES PRE-APPROVAL BY TOWN OF BROWNSBURG.
2. MANHOLE CONSTRUCTION AND ACCESSORIES ABOVE BASE SAME AS SHOWN FOR STANDARD SANITARY MANHOLE.
3. CONSTRUCT A FORMED INVERT FROM NEW SEWER LINE TO ALLOW FLOW TO THE EXISTING PIPE.
4. CUT AND REMOVE THE TOP HALF OF EXISTING PIPE TO WITHIN 6" OF THE MANHOLE WALLS AFTER THE INVERT AND SHELF HAVE BEEN FORMED AND THE MANHOLE HAS BEEN FULLY TESTED IN ACCORDANCE WITH THESE SPECIFICATIONS.
5. PROVIDE ADEQUATE PIPE SUPPORT DURING CONSTRUCTION TO PREVENT PIPE DAMAGE.

SANITARY MANHOLE OVER EXISTING SANITARY SEWER

NO SCALE

DETAIL NO. SS-12
REVISION DATE: MAY 2013

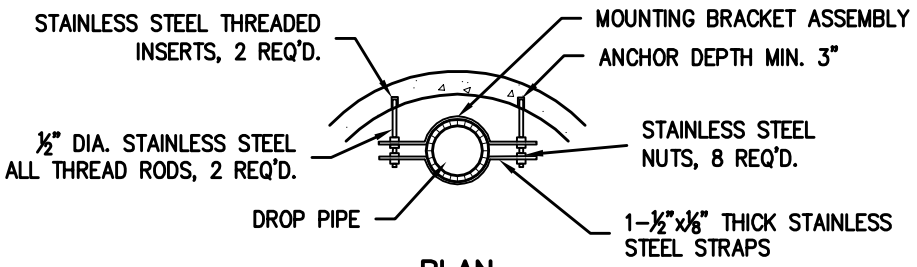

PLAN

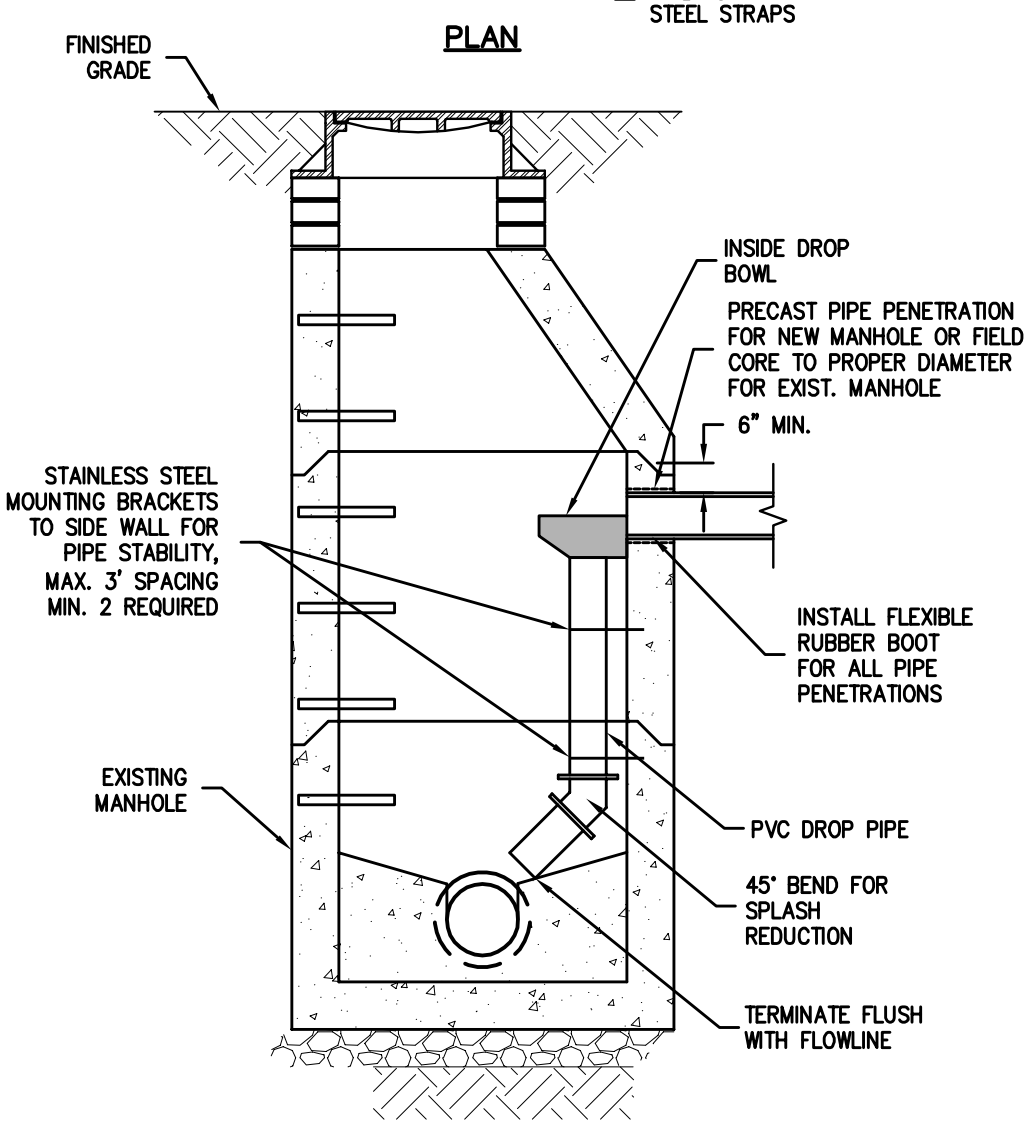

SECTION

NOTES:

1. REQUIRES PRE-APPROVAL BY TOWN OF BROWNSBURG.
2. FOR EXISTING MANHOLE RETRO-FIT ONLY. NEW MANHOLE ACCESSORIES SAME AS SHOWN FOR STANDARD SANITARY MANHOLE.
3. INSTALL INSIDE DROP TO AVOID CONFLICT WITH MANHOLE STEPS.

INSIDE DROP SANITARY MANHOLE

NO SCALE

DETAIL NO. SS-13
REVISION DATE: MAY 2013

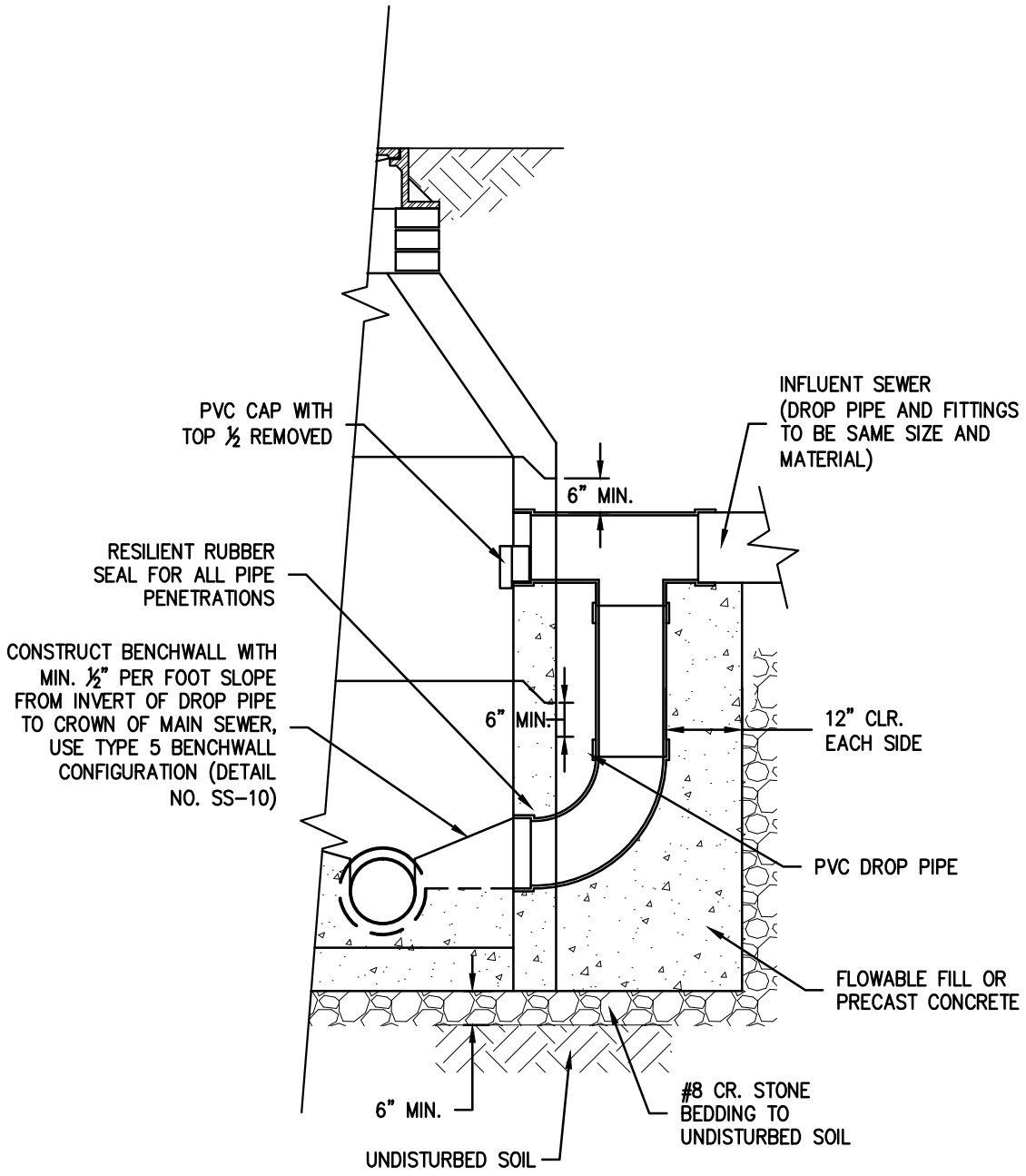

NOTES:

1. REQUIRES PRE-APPROVAL BY TOWN OF BROWNSBURG.
2. OUTSIDE DROP IS PREFERRED OVER INSIDE DROP.
3. MANHOLE CONSTRUCTION AND ACCESSORIES SAME AS SHOWN FOR STANDARD SANITARY MANHOLE.
4. INSTALL OUTSIDE DROP TO AVOID CONFLICT WITH MANHOLE STEPS.

OUTSIDE DROP SANITARY MANHOLE

NO SCALE

DETAIL NO. SS-14
REVISION DATE: MAY 2013

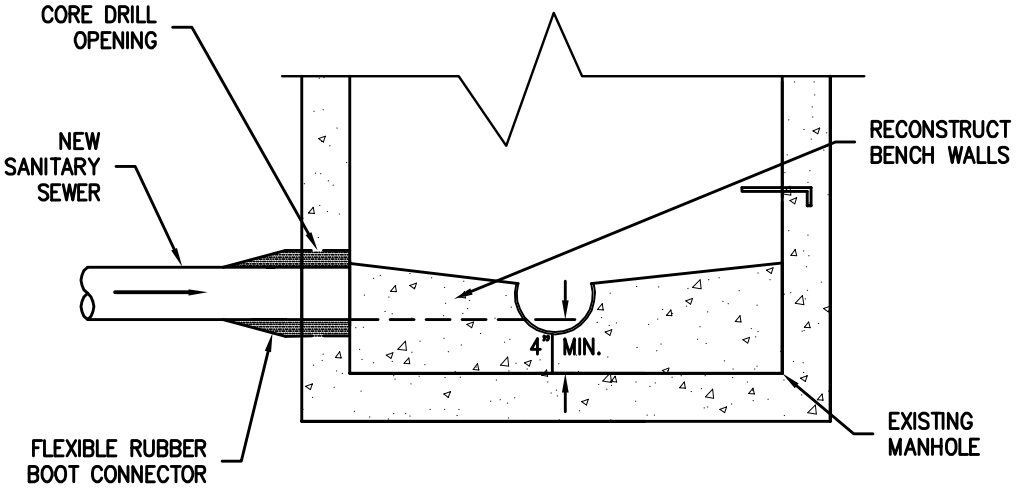

EXISTING MANHOLE CONNECTION

NO SCALE

DETAIL NO. SS-15
REVISION DATE: MAY 2013

CONSTRUCTION DETAILS

WW - WASTEWATER FORCE MAIN AND LIFT STATION SYSTEMS

TABLE OF CONTENTS

Air/Vacuum Release Valve & Vault WW-01
Force Main Reaction Blocking WW-02
Force Main Restrained Piping WW-03
Force Main Connection at Manhole WW-04
Lift Station Site Layout WW-05
Lift Station Plan - At Grade WW-06
Lift Station Plan - Sub-Grade WW-07
Lift Station Section A-A WW-08
Lift Station Section B-B WW-09
Lift Station Electrical Equipment WW-10
Lift Station One-Line Diagram WW-11

TOWN OF Brownsburg

MAY 2013

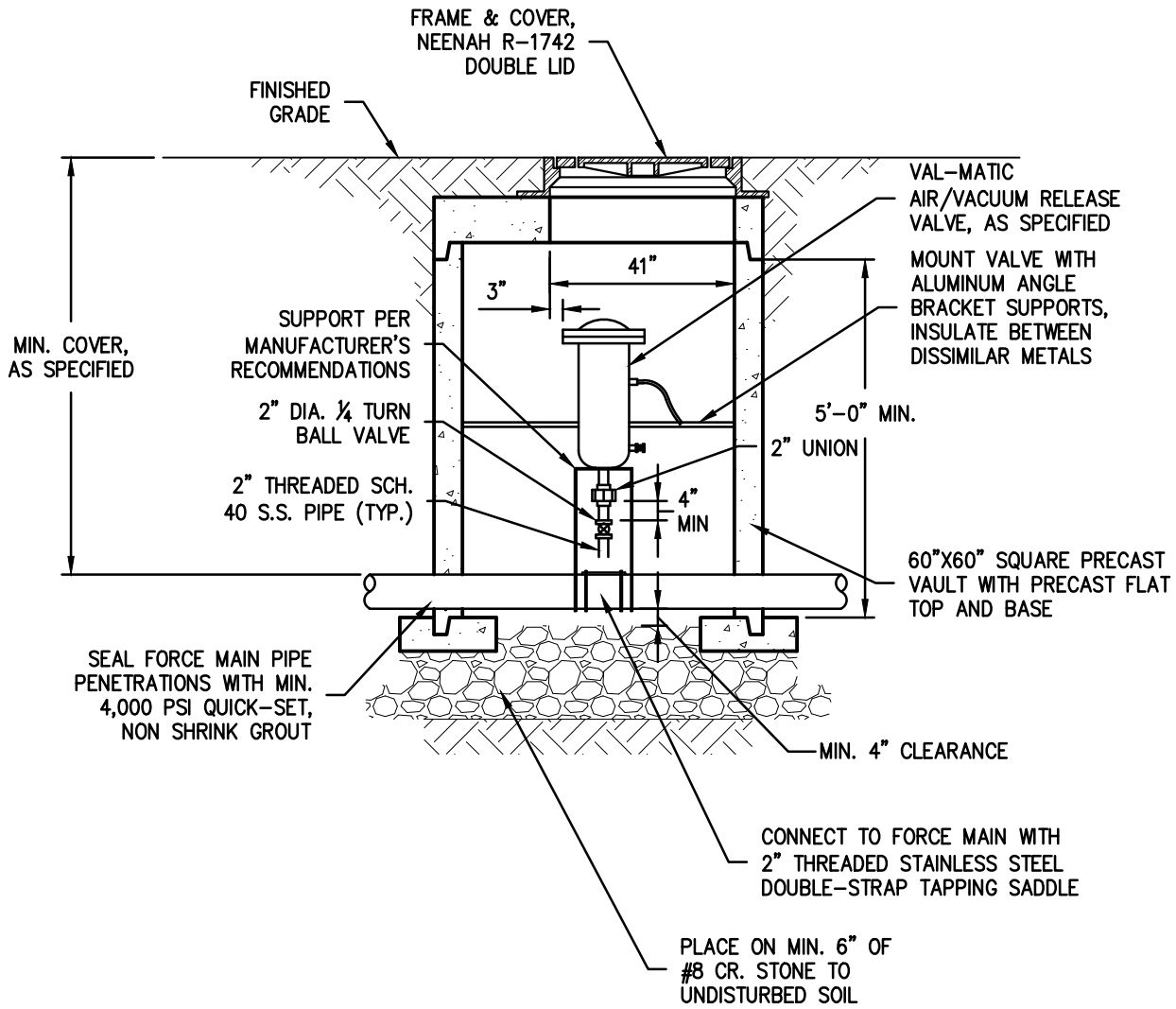

NOTES:

1. DETERMINE THE REQUIRED FORCE MAIN DEPTH AT THE STRUCTURE TO ENSURE THAT THE VALVE VAULT STRUCTURE DOES NOT EXTEND ABOVE FINISHED GRADE.

2. AIR/VACUUM RELEASE STRUCTURE LOCATION TO BE DETERMINED IN THE FIELD BY THE CONTRACTOR AT THE HIGH ELEVATION POINT OF THE FORCE MAIN.

3. LOCATE AIR/VACUUM RELEASE VALVE JUST INSIDE OF LID OPENING.

AIR/VACUUM RELEASE VALVE & VAULT

NO SCALE

DETAIL NO. WW-01
REVISION DATE: MAY 2013

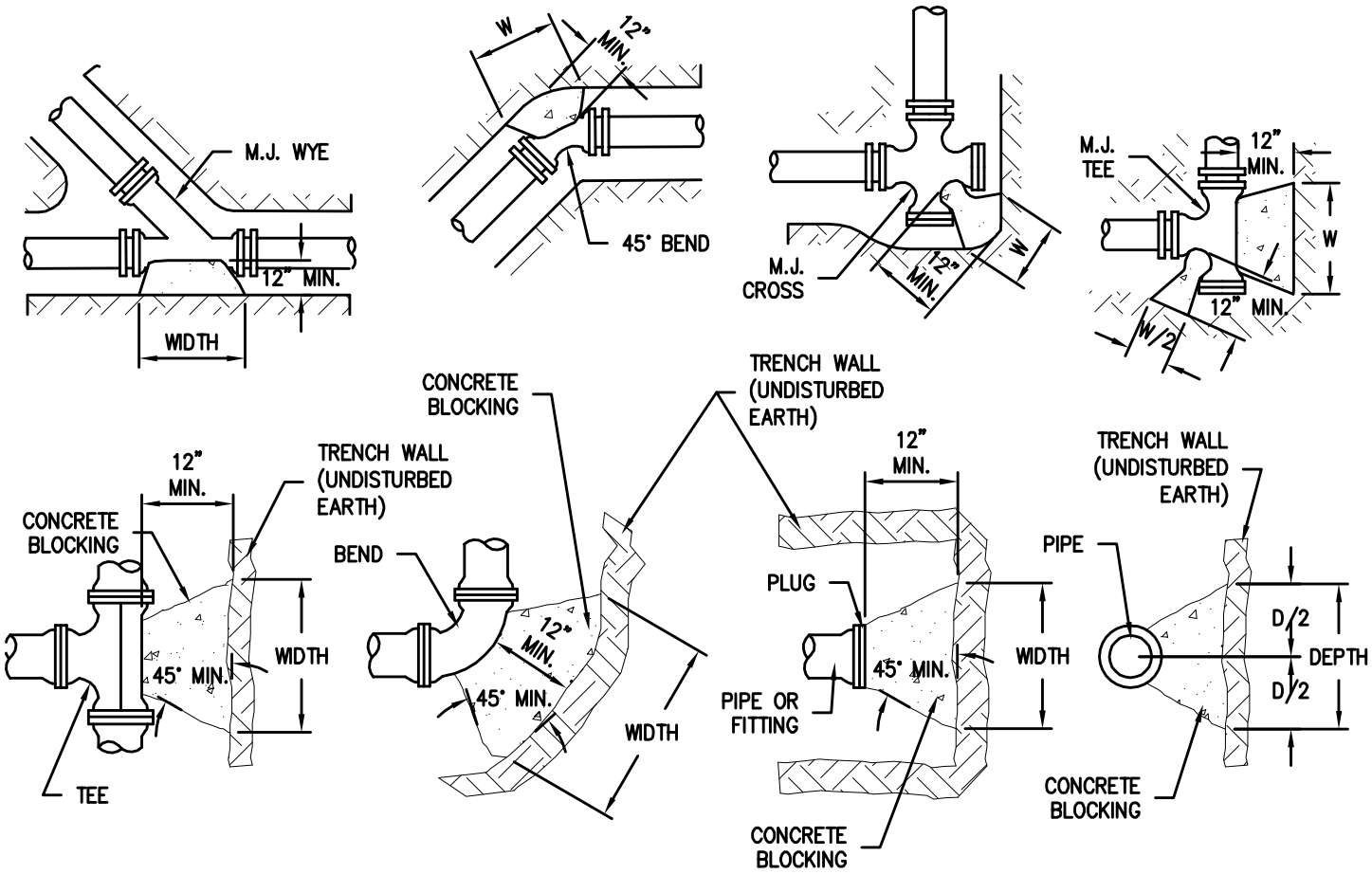

	TEE		22½°		45°		90°		PLUG		WYE		CROSS	
SIZE	W	D	W	D	W	D	W	D	W	D	W	D	W	D
3", 4"	2'-6"	1'-0"	1'-0"	0'-9"	1'-6"	1'-3"	2'-9"	1'-3"	1'-6"	1'-6"	2'-6"	1'-0"	2'-9"	1'-3"
6"	3'-3"	1'-6"	2'-0"	1'-0"	2'-6"	1'-6"	4'-3"	1'-6"	2'-3"	2'-3"	3'-3"	1'-6"	4'-3"	1'-6"
8"	4'-3"	2'-0"	2'-0"	1'-9"	3'-9"	1'-9"	6'-0"	2'-0"	3'-0"	3'-0"	4'-3"	2'-0"	6'-0"	2'-0"
10"	5'-3"	2'-6"	3'-0"	1'-9"	4'-0"	2'-6"	7'-3"	2'-6"	3'-9"	3'-9"	5'-3"	2'-6"	7'-3"	2'-6"
12"	6'-0"	3'-0"	3'-6"	2'-0"	4'-9"	3'-6"	7'-9"	3'-0"	4'-3"	4'-3"	6'-0"	3'-0"	7'-9"	3'-0"

NOTES:
1. CONCRETE REACTION BLOCKING SHALL NOT COVER PIPE JOINTS, BOLTS, OR GLANDS.

FORCE MAIN REACTION BLOCKING

NO SCALE

DETAIL NO. WW-02
REVISION DATE: MAY 2013

TABLE 1: PIPE RESTRAINT FOR BEDDING OUTSIDE PAVEMENT LOADING ZONE

FEET OF RESTRAINED PIPE @ 100 PSI					
FITTING TYPE	FORCE MAIN SIZE				
	4 INCH	6 INCH	8 INCH	10 INCH	12 INCH
11 1/4° BEND	2'	3'	4'	5'	6'
22 1/2° BEND	4'	6'	8'	10'	11'
45° BEND	9'	13'	16'	20'	23'
90° BEND	21'	30'	38'	47'	55'
25 1/2° VERTICAL BEND	6'	9'	11'	14'	16'
45° VERTICAL BEND	12'	18'	23'	28'	33'
VALVE/PLUG	15'	21'	27'	34'	40'
TEE OUTLET	15'	21'	27'	34'	40'

NOTE: TYPE 2 TRENCH, CLAY BACKFILL

TABLE 2: PIPE RESTRAINT FOR BEDDING INSIDE PAVEMENT LOADING ZONE

FEET OF RESTRAINED PIPE @ 100 PSI					
FITTING TYPE	FORCE MAIN SIZE				
	4 INCH	6 INCH	8 INCH	10 INCH	12 INCH
11 1/4° BEND	1'	1'	1'	2'	2'
22 1/2° BEND	2'	2'	2'	3'	3'
45° BEND	3'	4'	4'	5'	6'
90° BEND	6'	8'	10'	12'	14'
22 1/2° VERTICAL BEND	3'	4'	5'	6'	7'
45° VERTICAL BEND	6'	8'	10'	13'	15'
VALVE/PLUG	14'	19'	25'	30'	35'
TEE OUTLET	14'	19'	25'	30'	35'

NOTE: TYPE 4 TRENCH, SAND/GRANULAR BACKFILL

FORCE MAIN RESTRAINED PIPING

NO SCALE

DETAIL NO. WW-03
REVISION DATE: MAY 2013

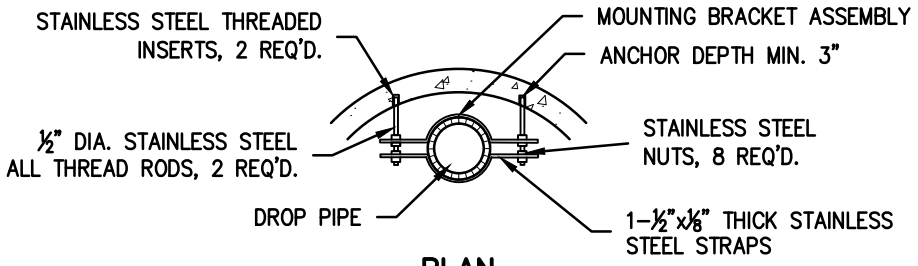

PLAN

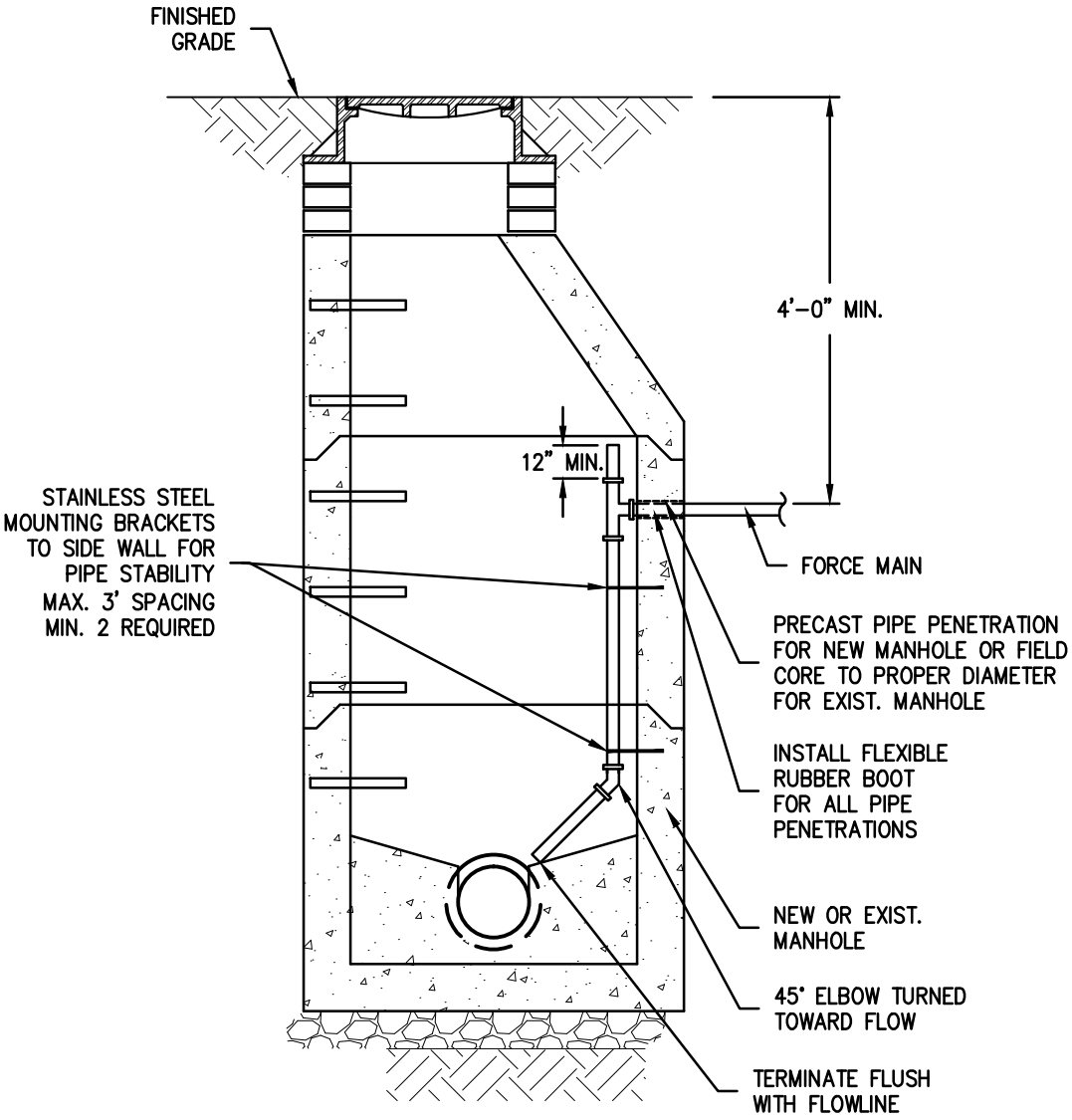

SECTION

NOTES:

1. NEW MANHOLE CONSTRUCTION AND ACCESSORIES SAME AS SHOWN FOR STANDARD SANITARY SEWER MANHOLE.

2. FOR FORCE MAINS 3" DIA. AND LARGER, MANHOLE LINING IS REQUIRED AT DISCHARGE MANHOLE AND FIRST TWO MANHOLES DOWNSTREAM OF DISCHARGE MANHOLE.

FORCE MAIN CONNECTION AT MANHOLE

NO SCALE

DETAIL NO. WW-04
REVISION DATE: MAY 2013

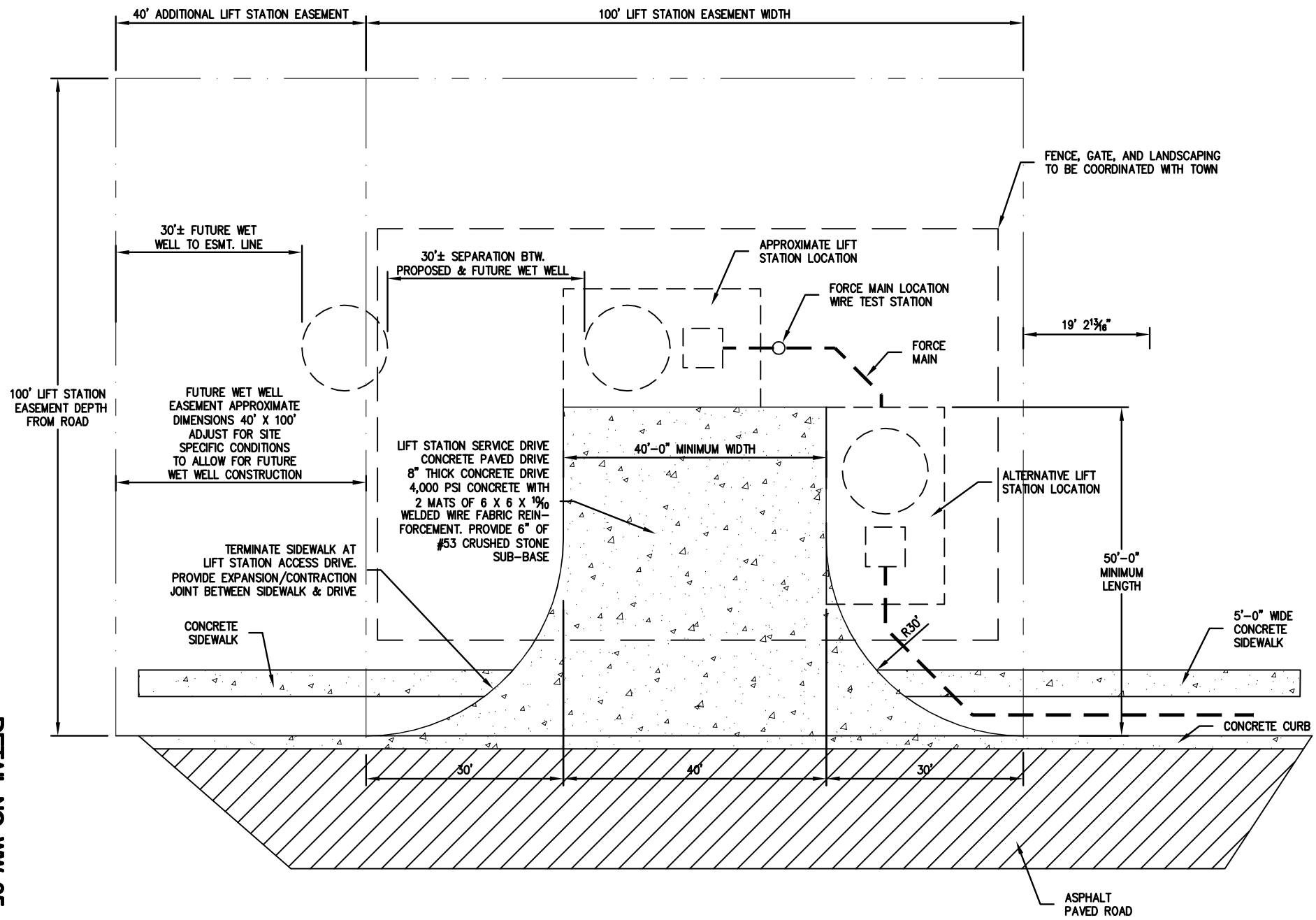

LIFT STATION SITE LAYOUT

NO SCALE

DETAIL NO. WW-05
REVISION DATE: MAY 2013

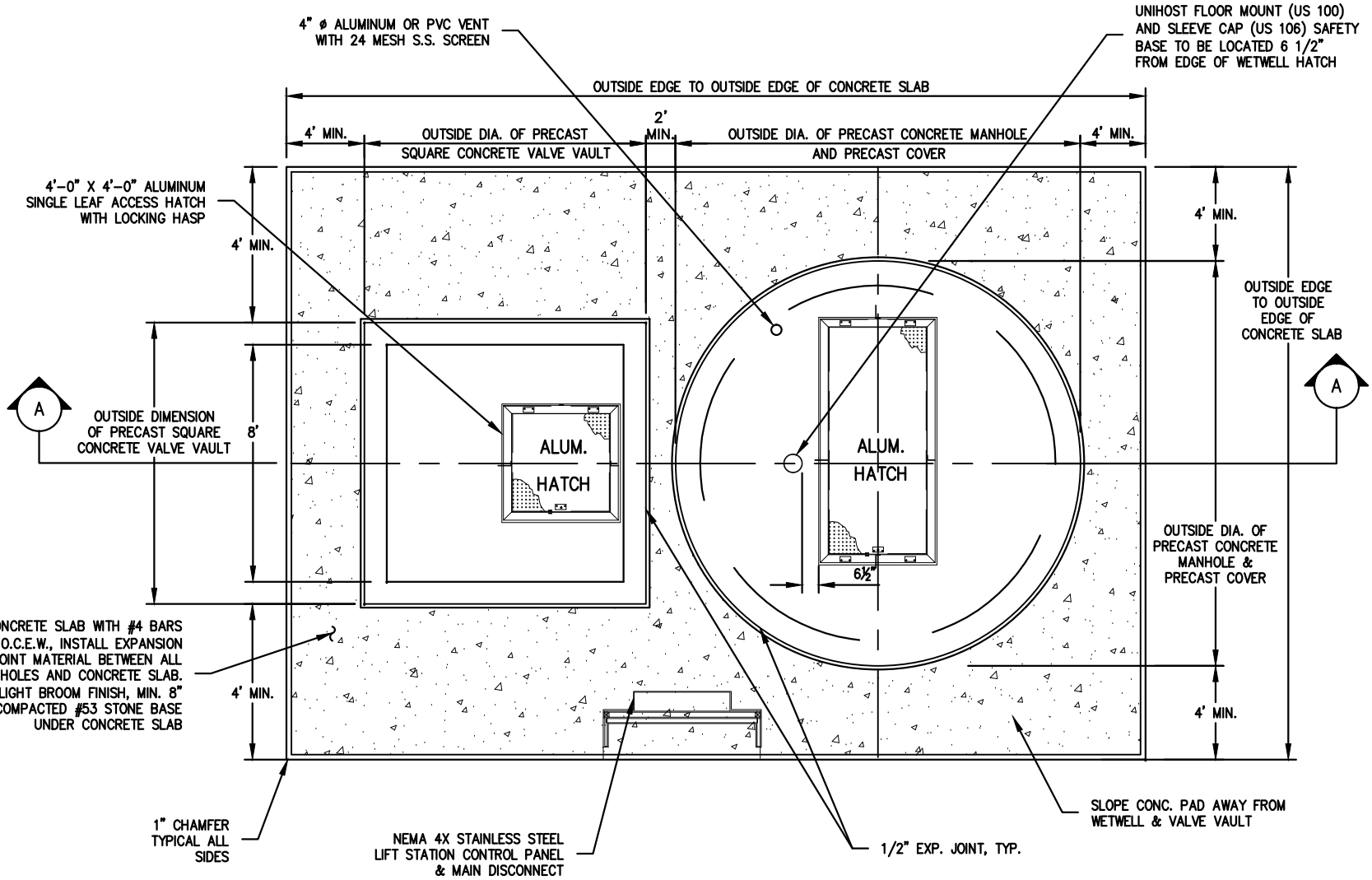

NOTES:

1. CONTRACTOR SHALL VERIFY THAT PUMPS CAN BE REMOVED FROM WETWELL VIA GUIDERAILS THROUGH HATCH OPENING.
2. HYDRANT LOCATION WILL BE SITE SPECIFIC AND SHALL BE SHOWN ON SITE PLAN.

LIFT STATION PLAN – AT GRADE

NO SCALE

DETAIL NO. WW-06
REVISION DATE: MAY 2013

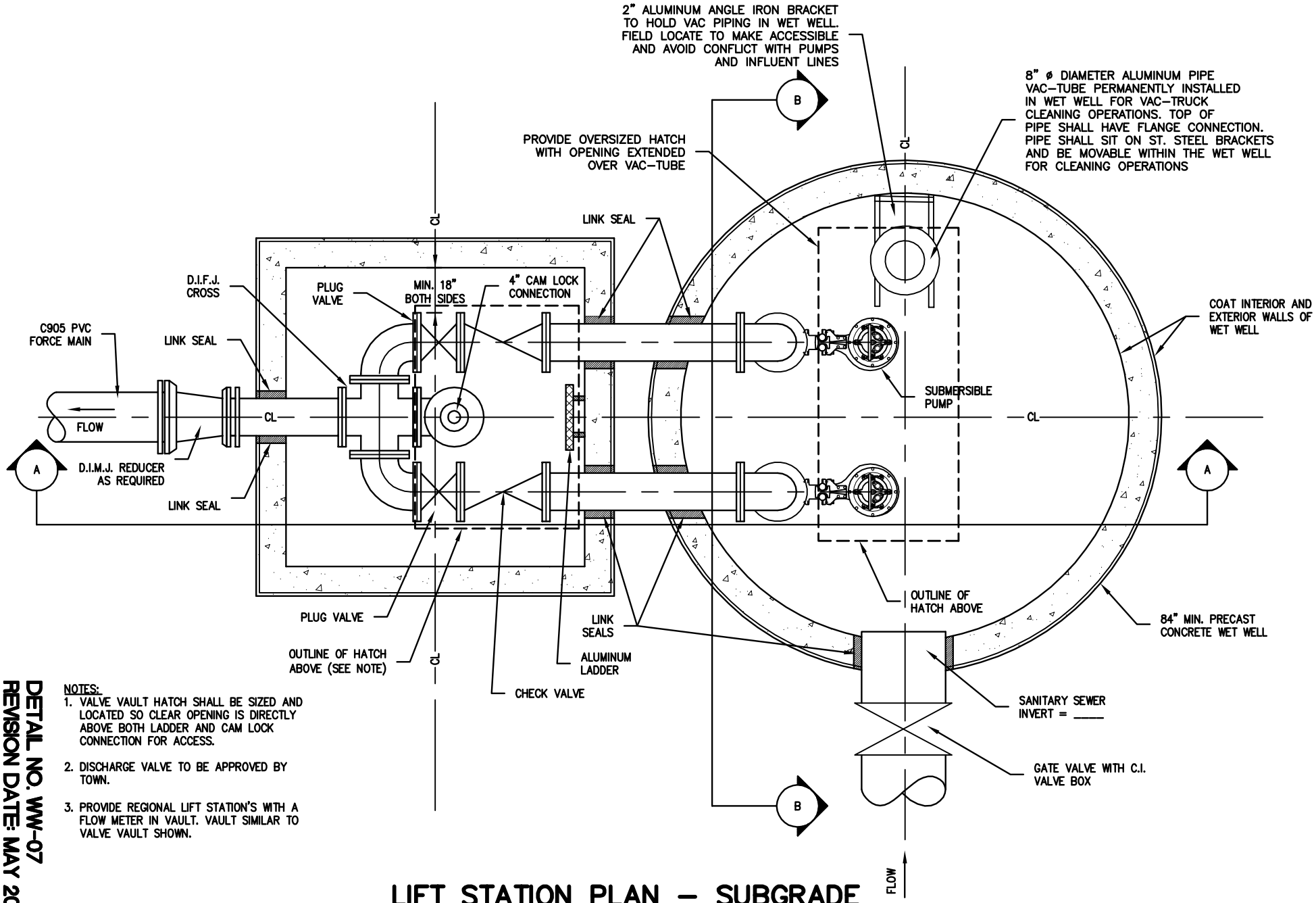

NOTES:

1. VALVE VAULT HATCH SHALL BE SIZED AND LOCATED SO CLEAR OPENING IS DIRECTLY ABOVE BOTH LADDER AND CAM LOCK CONNECTION FOR ACCESS.
2. DISCHARGE VALVE TO BE APPROVED BY TOWN.
3. PROVIDE REGIONAL LIFT STATION'S WITH A FLOW METER IN VAULT. VAULT SIMILAR TO VALVE VAULT SHOWN.

LIFT STATION PLAN – SUBGRADE

NO SCALE

DETAIL NO. WW-07
REVISION DATE: MAY 2013

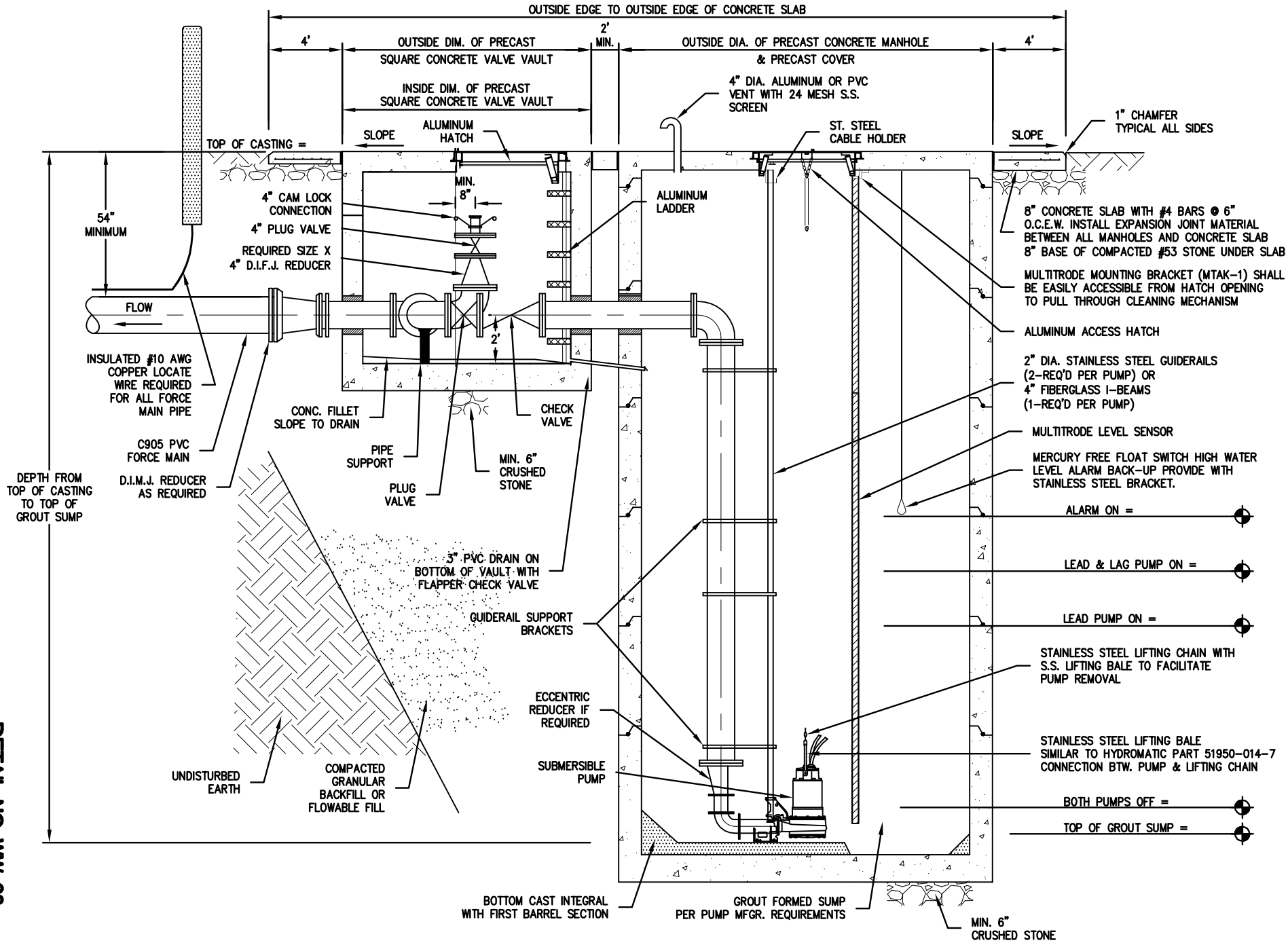

LIFT STATION SECTION A-A

NO SCALE

DETAIL NO. WW-08
REVISION DATE: MAY 2013

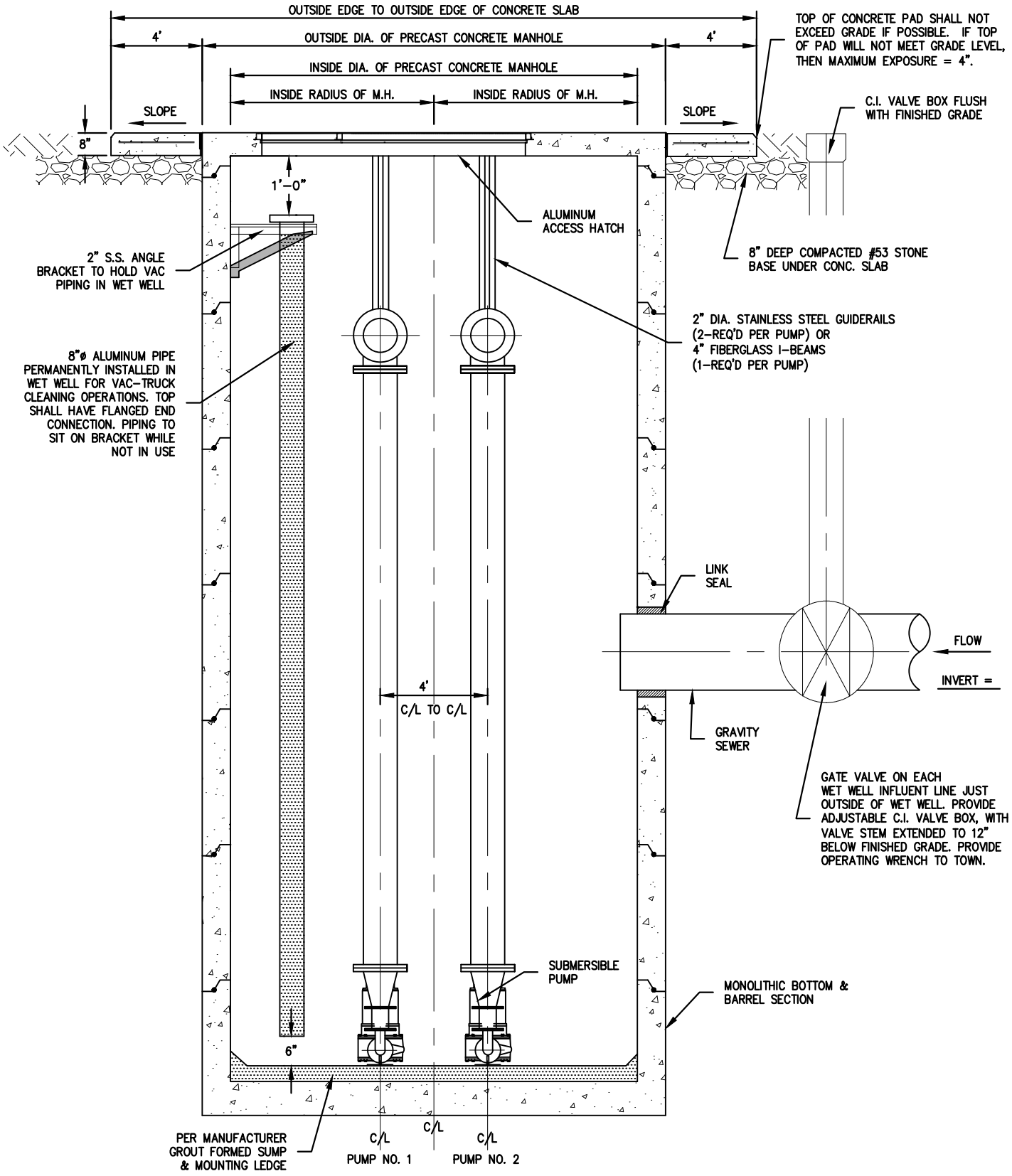

LIFT STATION SECTION B-B

NO SCALE

DETAIL NO. WW-09
REVISION DATE: MAY 2013

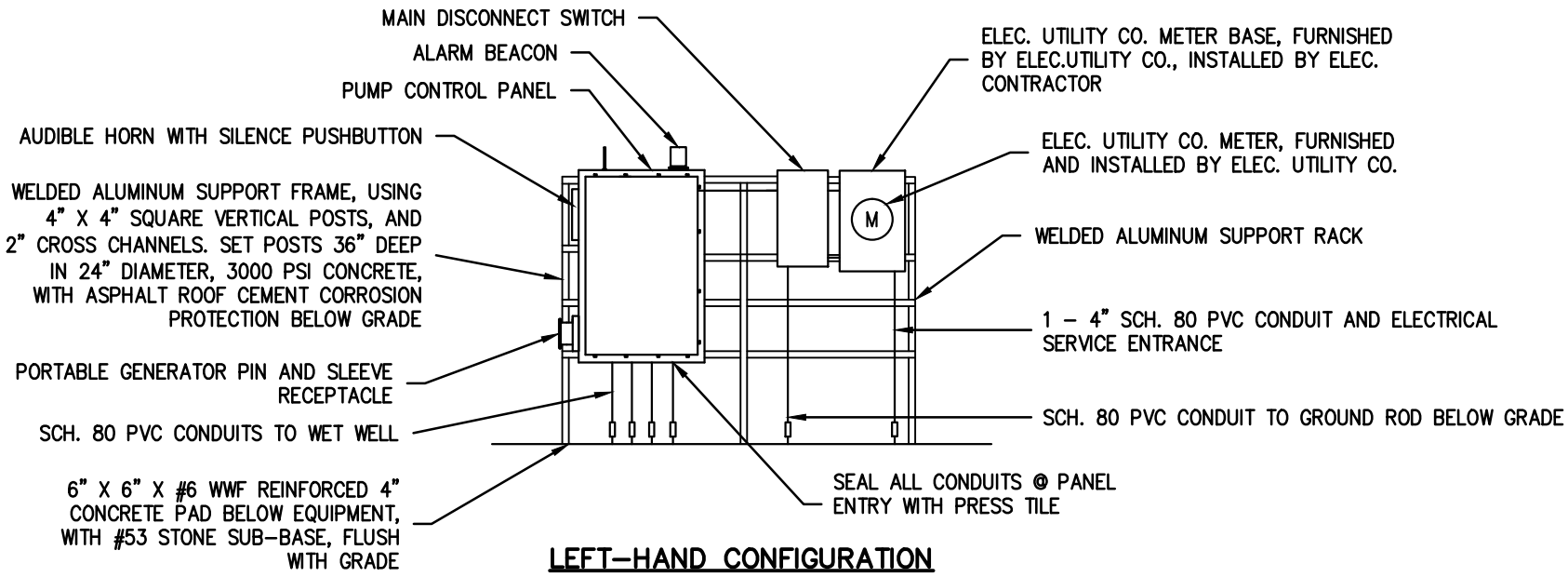

LEFT–HAND CONFIGURATION

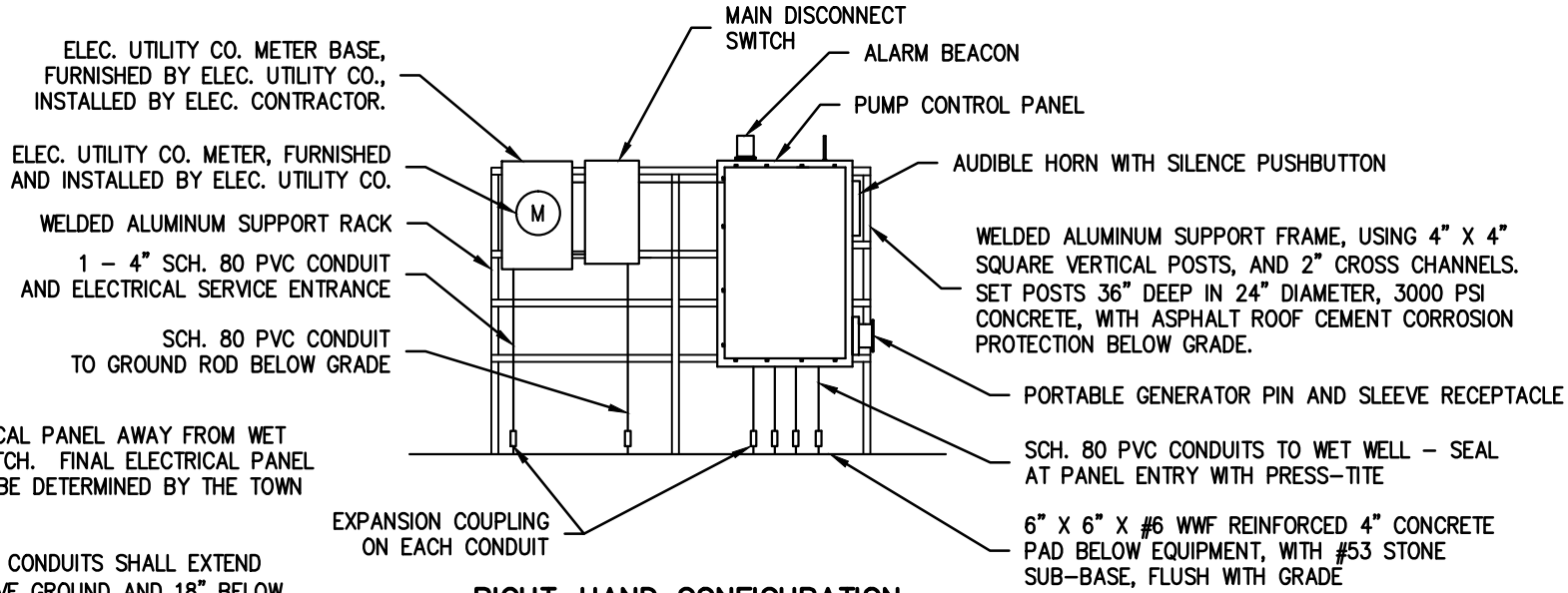

RIGHT–HAND CONFIGURATION

NOTES:

1. POSITION ELECTRICAL PANEL AWAY FROM WET WELL ACCESS HATCH. FINAL ELECTRICAL PANEL LOCATION SHALL BE DETERMINED BY THE TOWN OF BROWNSBURG.
2. ALL SCH. 80 PVC CONDUITS SHALL EXTEND MINIMUM 18" ABOVE GROUND AND 18" BELOW GROUND.

LIFT STATION ELECTRICAL EQUIPMENT

NO SCALE

DETAIL NO. WW-10
REVISION DATE: MAY 2013

ELECTRICAL NOTES

1. AERIAL MEDIUM VOLTAGE CONDUCTORS.
2. TRANSFORMER BANK ON ELEC. UTILITY CO. POLE.
3. UTILITY CO. WOOD POLE.
4. GROUNDING AT ELEC. UTILITY POLE.
5. CONNECTION TO RISER CONDUCTORS.
6. WEATHERHEAD AND CONDUCTOR PIGTAILS.
7. 1 – 4" SCHD. 40 PVC CONDUIT RISER SPACED 9" AWAY FROM POLE.
8. SERVICE CONDUCTORS IN 1 – 4" SCHD. 40 PVC CONDUIT.
9. USE SCHD. 40 PVC CONDUIT ABOVE AND BELOW GROUND FOR ELECTRICAL SERVICE. USE GRS ELLS AND STUBS AT THE METER BASE.
10. METER AND BASE.
11. BOND BUSHINGS AND BONDING OF CONDUITS AND ENCLOSURES.
12. 3–#1, 1–#6 GROUND, 1 1/2" SCH. 80 PVC C. MINIMUM SERVICE SIZE. CONFIRM SERVICE SIZE IF MOTORS ARE LARGER THAN 7.5HP, 460V, 3 PHASE.
13. GROUNDED FUSED MAIN DISCONNECT SWITCH, WITH NEMA 4X STAINLESS STEEL ENCLOSURE.
14. 5/8" X 8'–0" COPPER–CLAD GROUND ROD AND #6 GROUND, 3/4" C.
15. 3–#1, 1–#6 GROUND, 1 1/2" GRS C. MINIMUM SERVICE SIZE. CONFIRM SERVICE SIZE IF MOTORS ARE LARGER THAN 7.5HP, 460V, 3 PHASE.
16. GENERATOR RECEPTACLE AND PUMP PANEL CIRCUIT BREAKER WITH MECHANICAL INTERLOCK (WALKING BEAM).
17. 3–#1, 1–#6 GROUND, MINIMUM SIZE. CONFIRM SIZE IF MOTORS ARE LARGER THAN 7.5HP, 460V, 3 PHASE.
18. PIN AND SLEEVE NEMA 4X RECEPTACLE FOR CONNECTION OF PORTABLE GENERATOR. CONFIRM CONFIGURATION WITH TOWN.
19. LEVEL SENSOR CABLE.
20. PUMP MOTOR CONTROL PANEL, NEMA 4X.
21. SCH. 80 PVC CONDUITS, PUMP CABLES, FLOAT CABLES, AND LEVEL SENSOR CABLE.
22. SCH. 80 PVC CONDUITS APPROPRIATE FOR CLASS 1, DIVISION 1, GROUP D HAZARDOUS ENVIRONMENT.
23. STRAIN RELIEF CABLE GRIP AND HOOK FOR SUPPORT OF POWER AND CONTROL CABLES, ACCESSIBLE FROM WET WELL HATCH.
24. CABLES WITH PUMP POWER AND SENSOR CONDUCTORS.
25. WEIGHTED FLOAT SWITCH.
26. HAZARDOUS ATMOSPHERE; ALL CONDUITS ENTERING WET WELL SHALL BE SEALED AT PANEL ENTRY.
27. ALARM BEACON.
28. MILTITRODE LEVEL SENSOR.
31. 200A MINIMUM SERVICE SIZE, AND 460V REQUIRED.

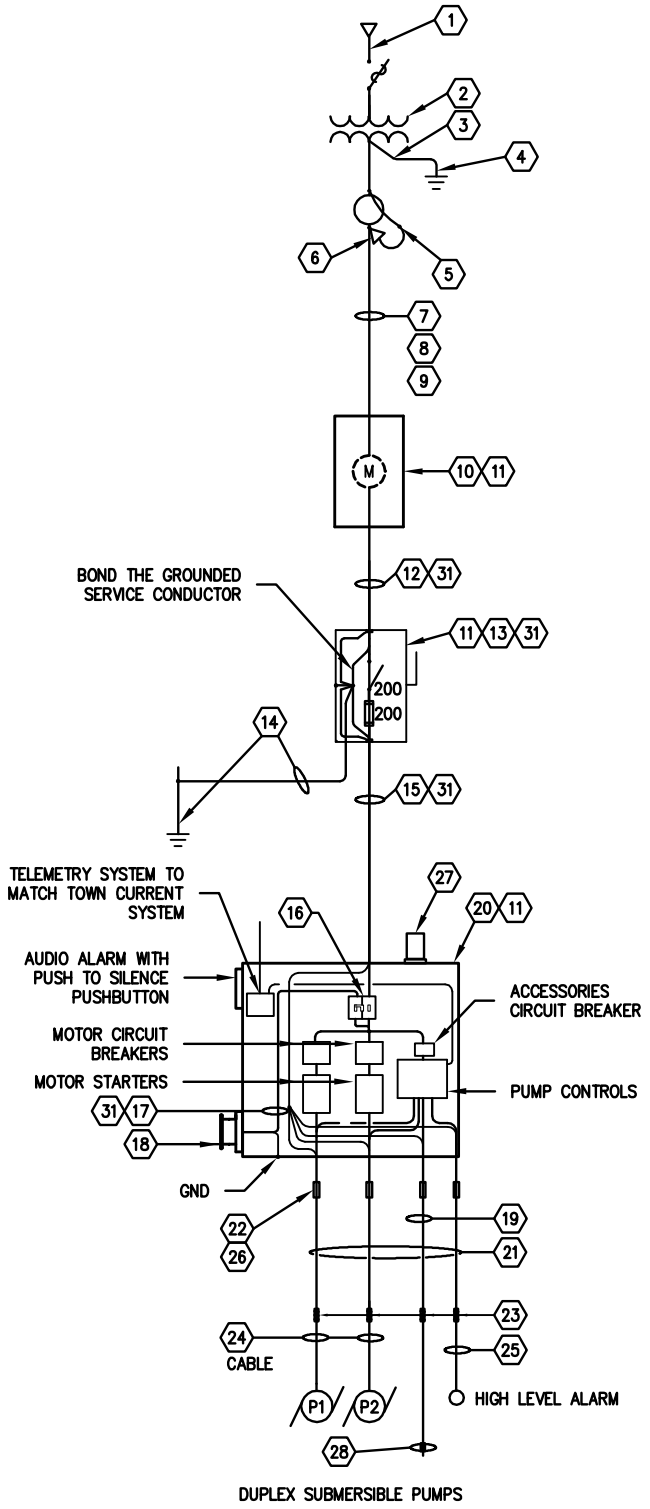

LIFT STATION ONE – LINE DIAGRAM

NO SCALE

DETAIL NO. WW-11
REVISION DATE: MAY 2013